MF 36-18 RDT > 13HT91GE695 (2015) > TANK 2,75 GAL

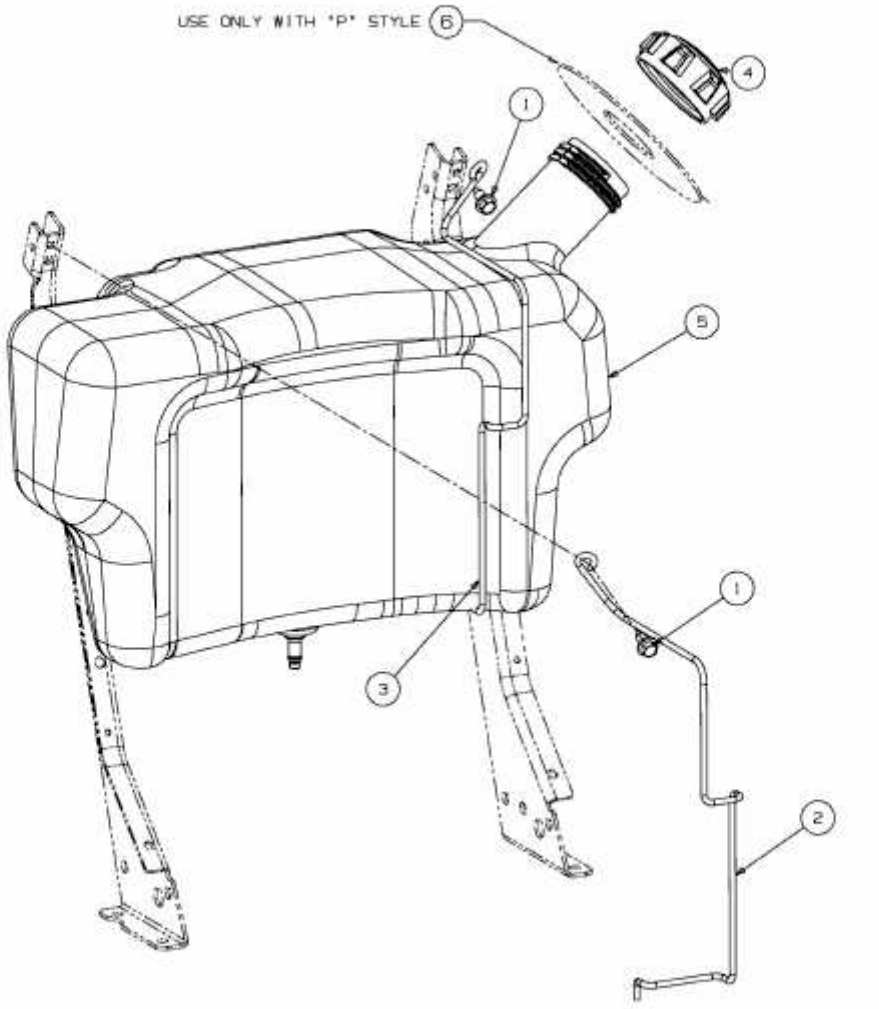

E3-04528C-01