CC 1020 BHN > 13HT91AN603 (2015) > VORDERACHSE

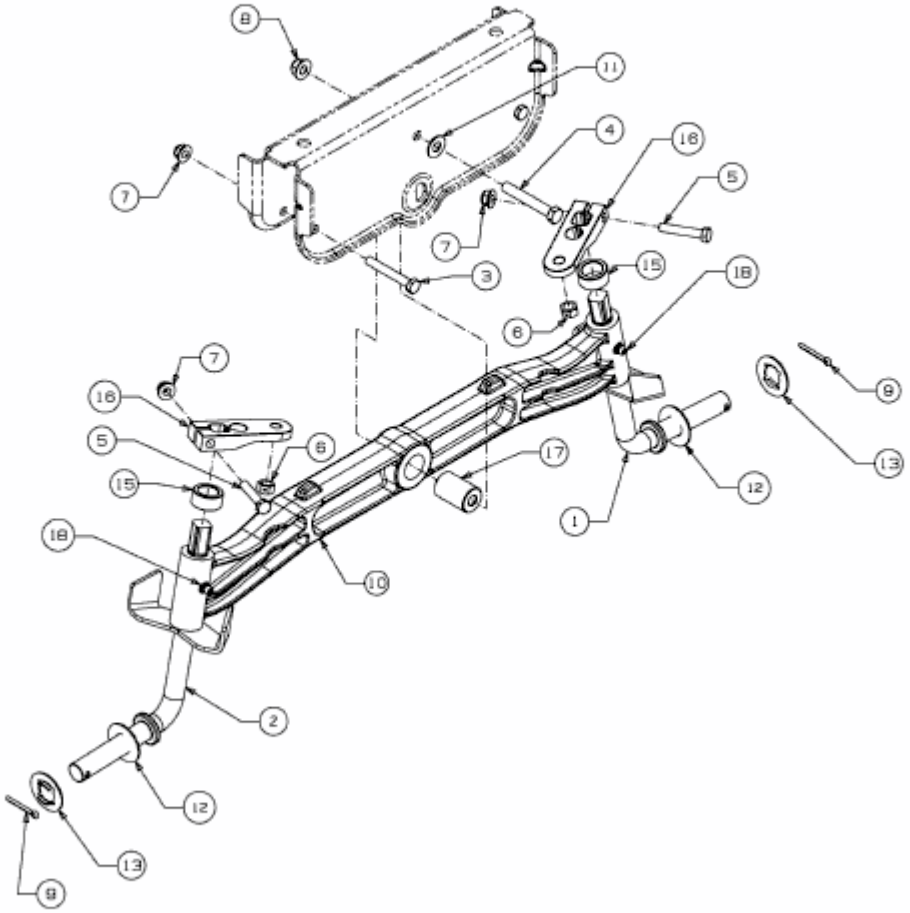

E3-07523C-01