200-107 TWINH > 13HT79GG615 (2017) > PARKBREMSE

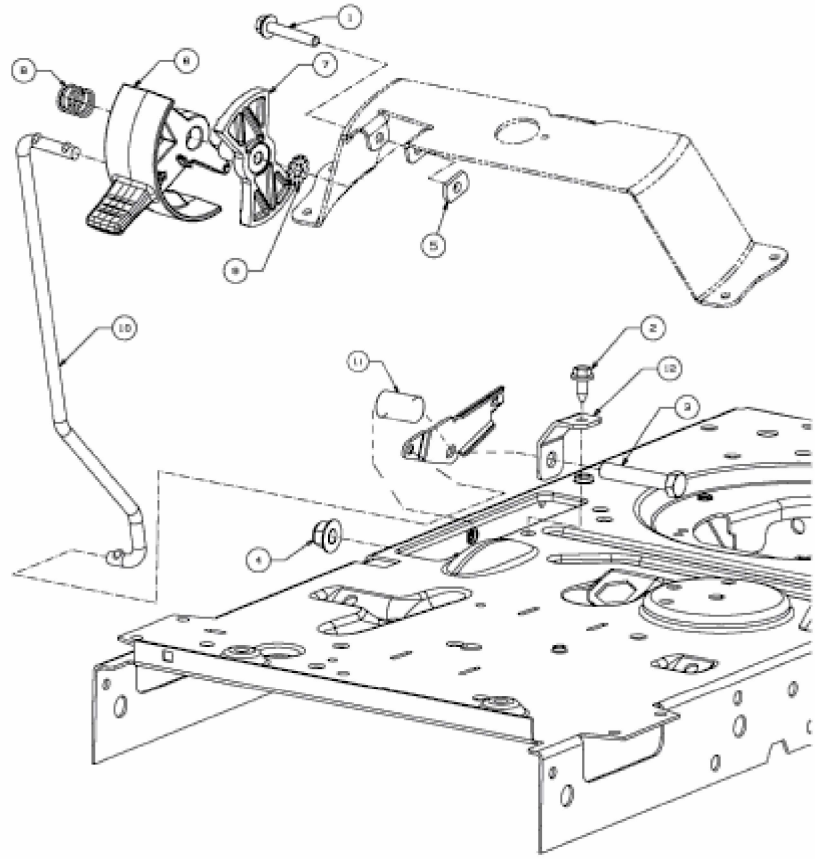

E3-07437B-01