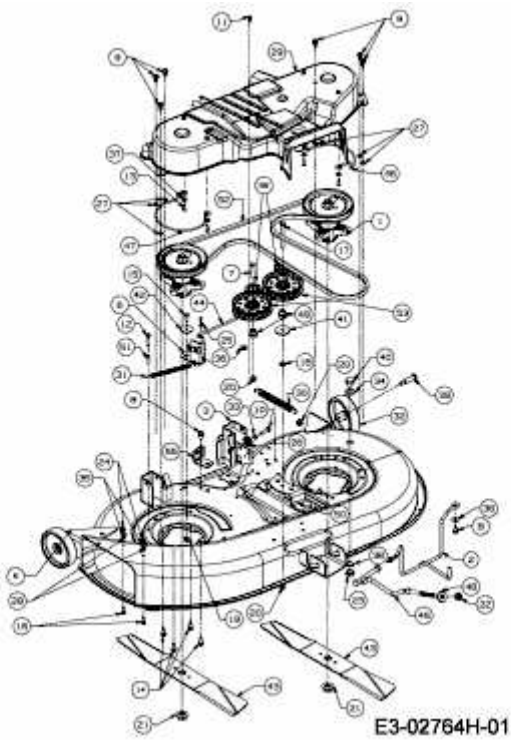200-107 TWIN > 13HT797G615 (2015) > MÄHWERK G (42"/107CM)