MF 50-24 SH > 13HQ93GP695 (2016) > SCHALTPLAN

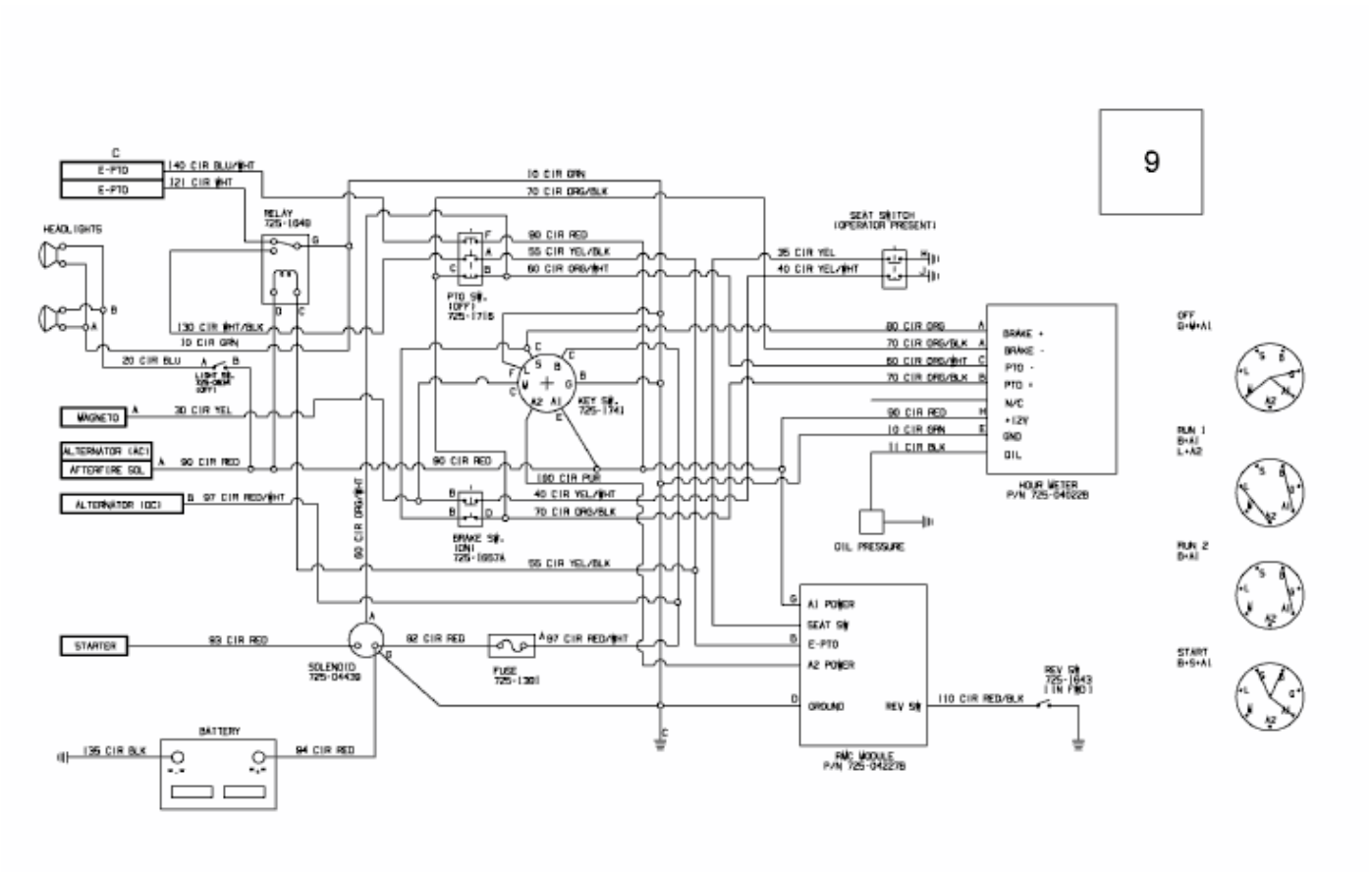

E3-07337C-02