MF 50-24 SD > 13HQ93GP695 (2015) > TANK 2,75 GAL

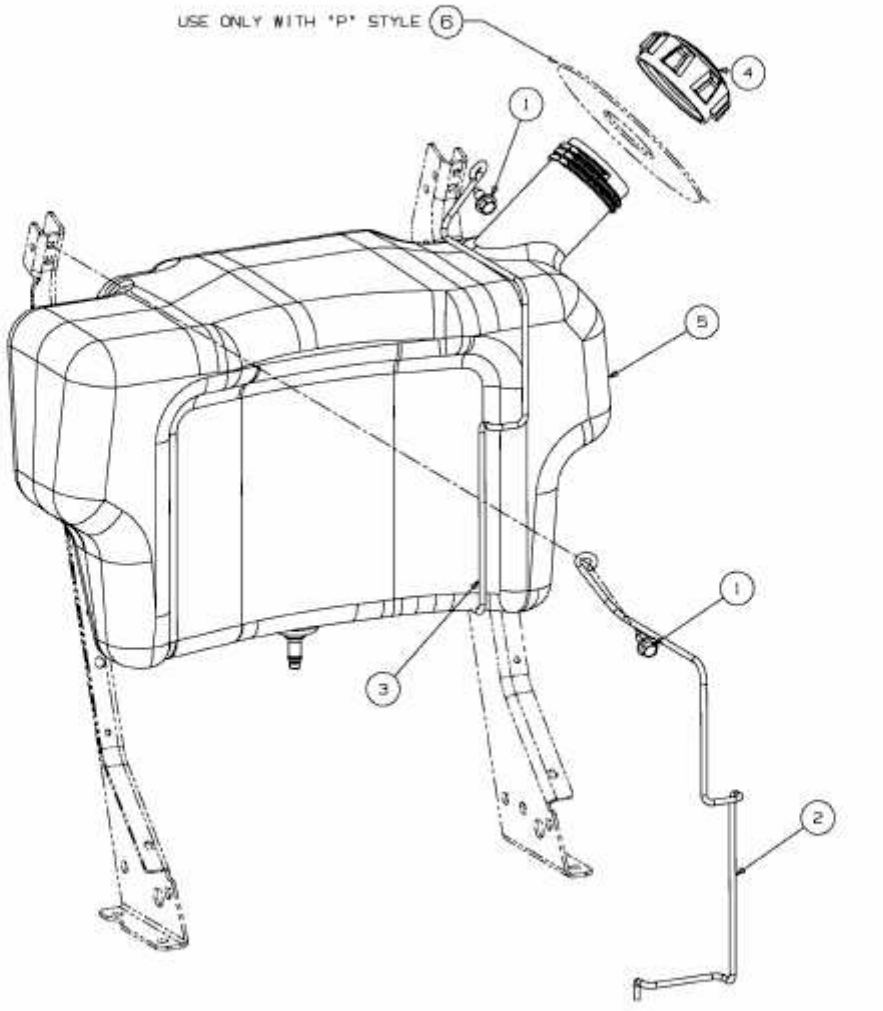

E3-04528C-01