CC 1024 KHN > 13HQ91AN603 (2015) > HIGH LIFT MESSER

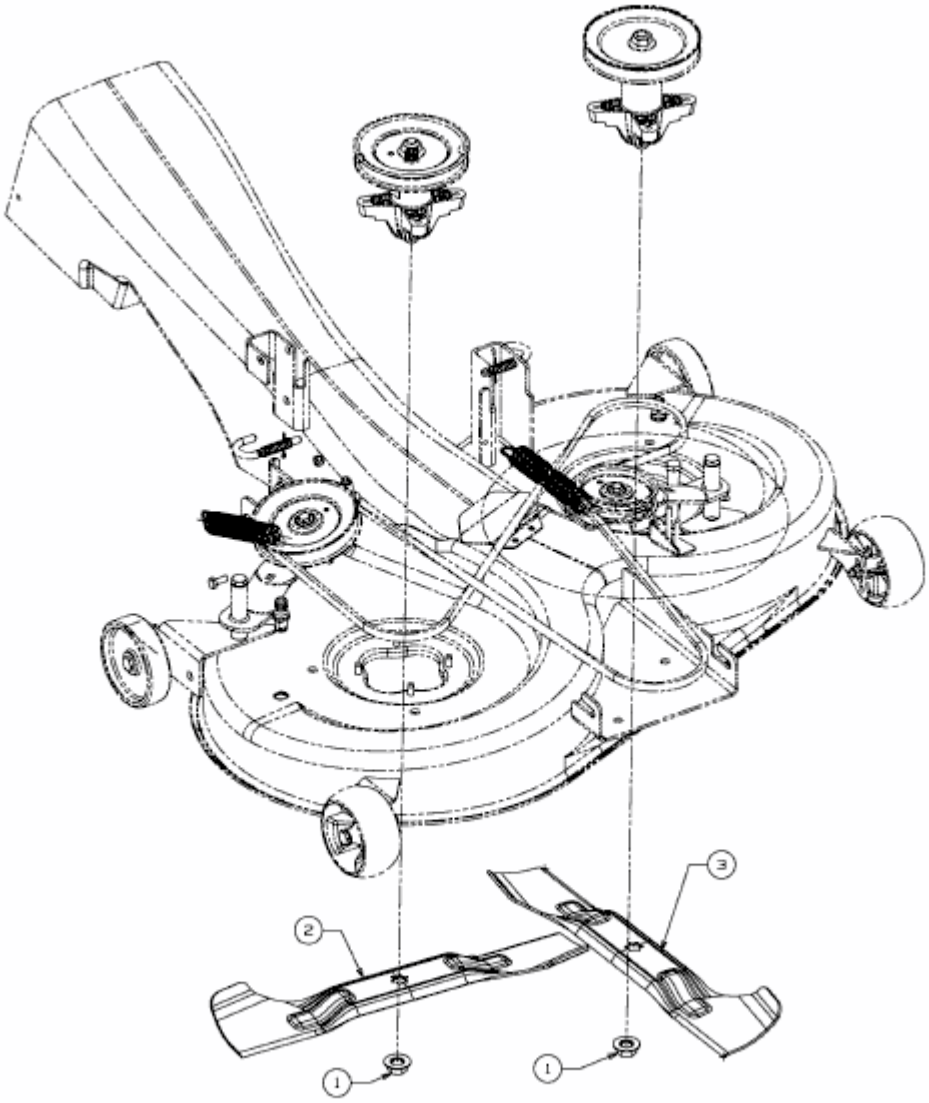

E3-03077A-01