MF 46-22 SH > 13HP93GT695 (2016) > SCHALTPLAN

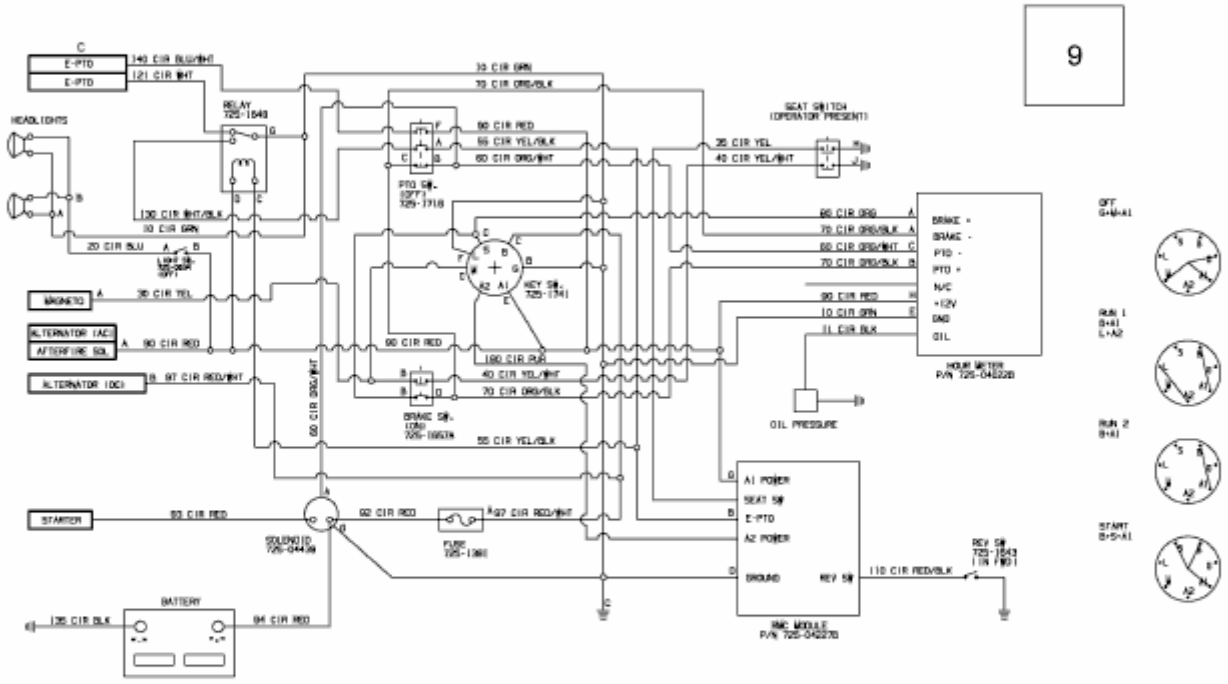

E3-07337C-02