MF 46-22 SH > 13HP93GT695 (2016) > VORDERACHSE

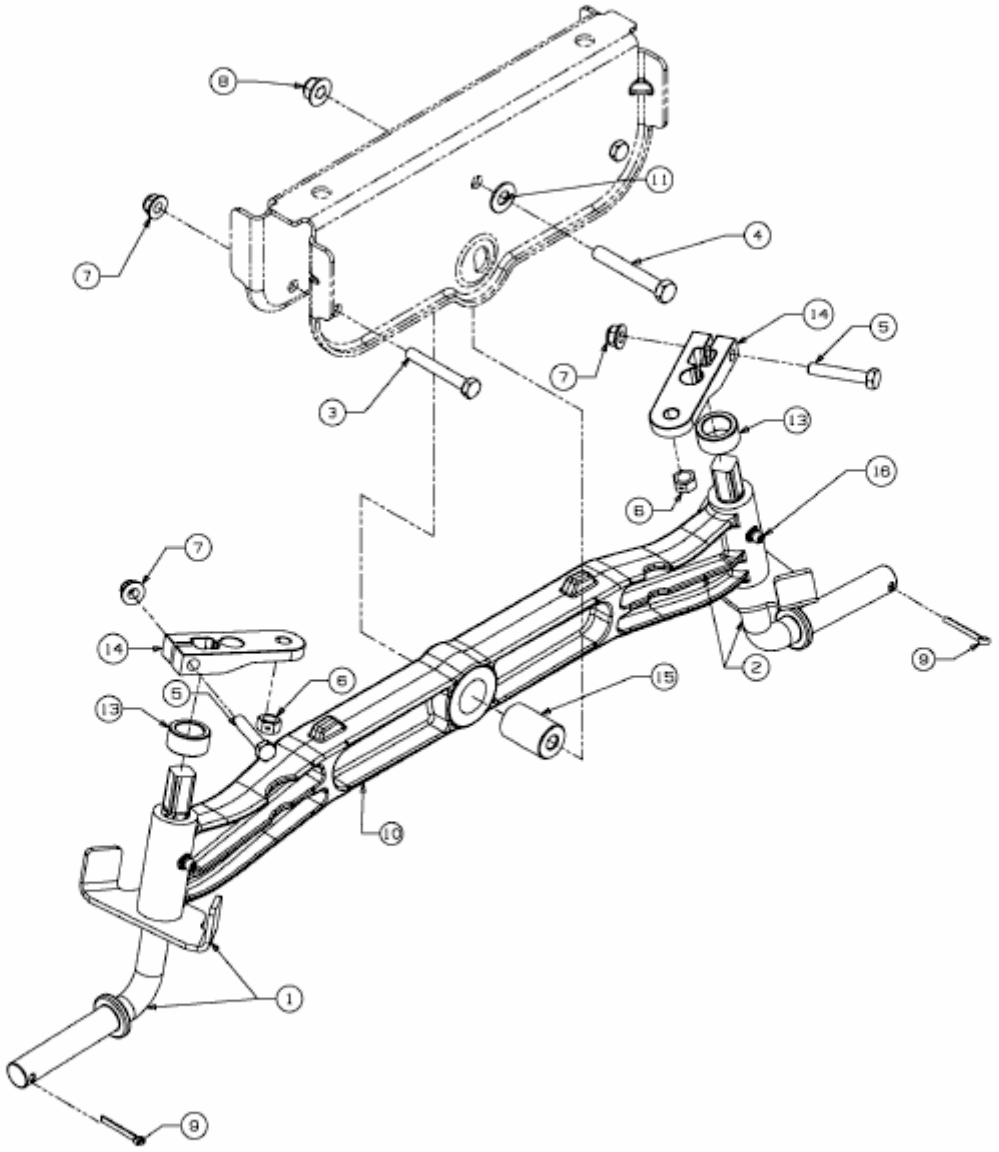

E3-08276B-01