MF 46-22 SH > 13HP93GT695 (2016) > MÄHWERKSAUSHEBUNG

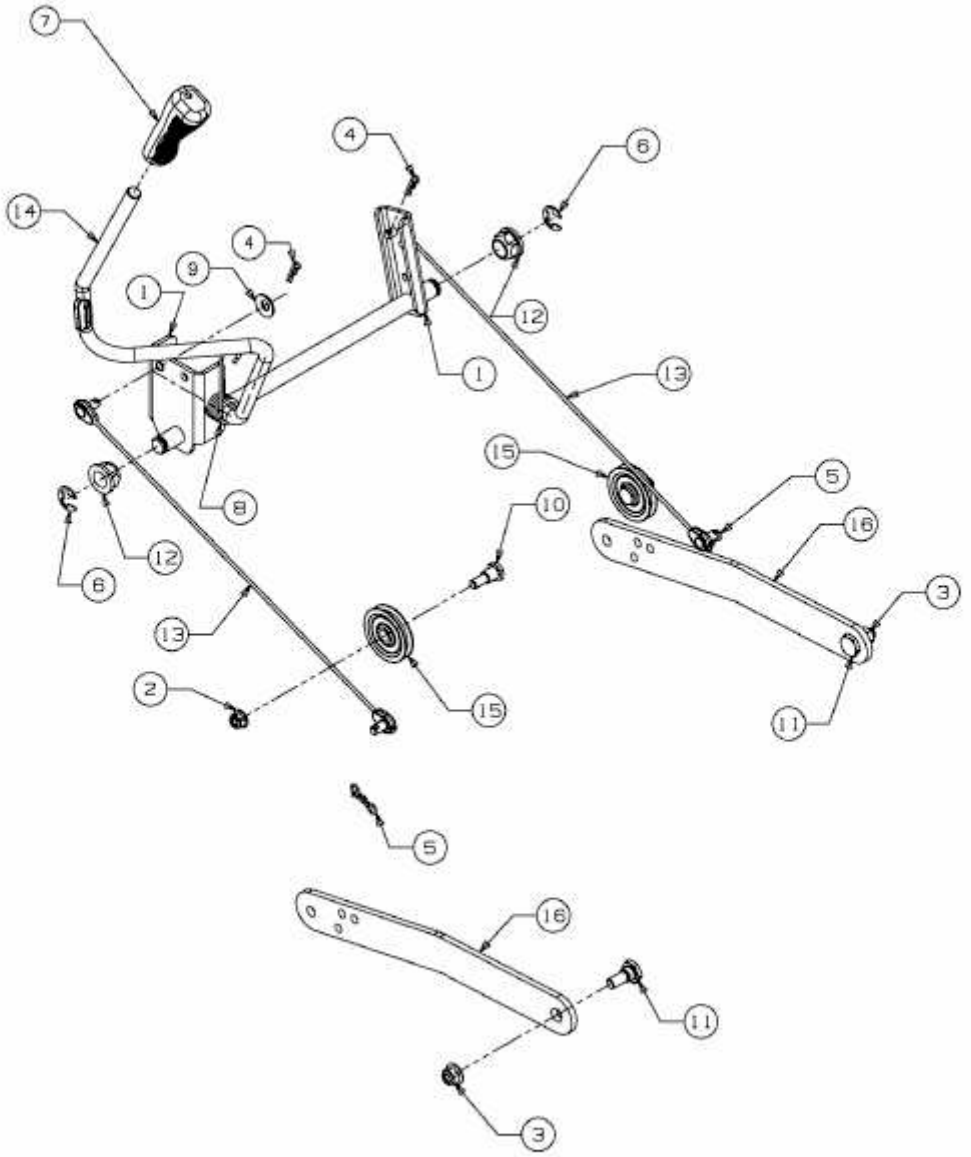

E3-04591C-01