MF 41-22 RD > 13HP91GN395 (2016) > VORDERACHSE

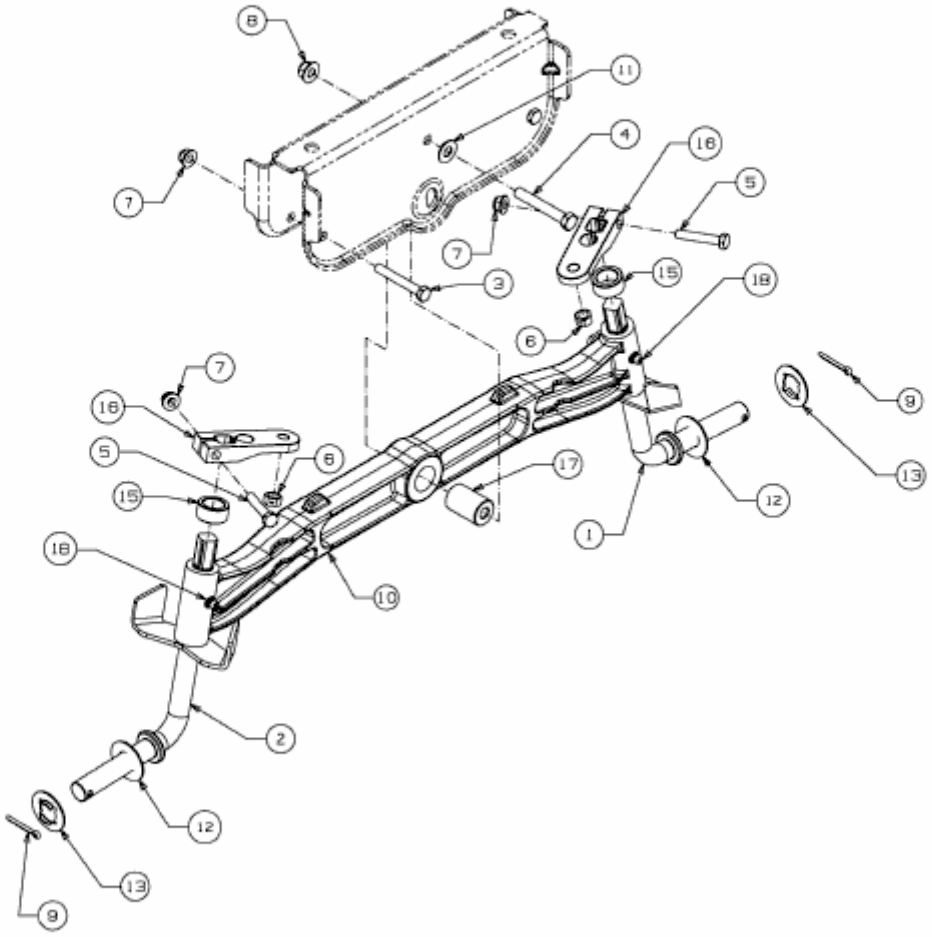

E3-07523C-01