VL 105 GCA > 13HO98KN617 (2014) > MESSER

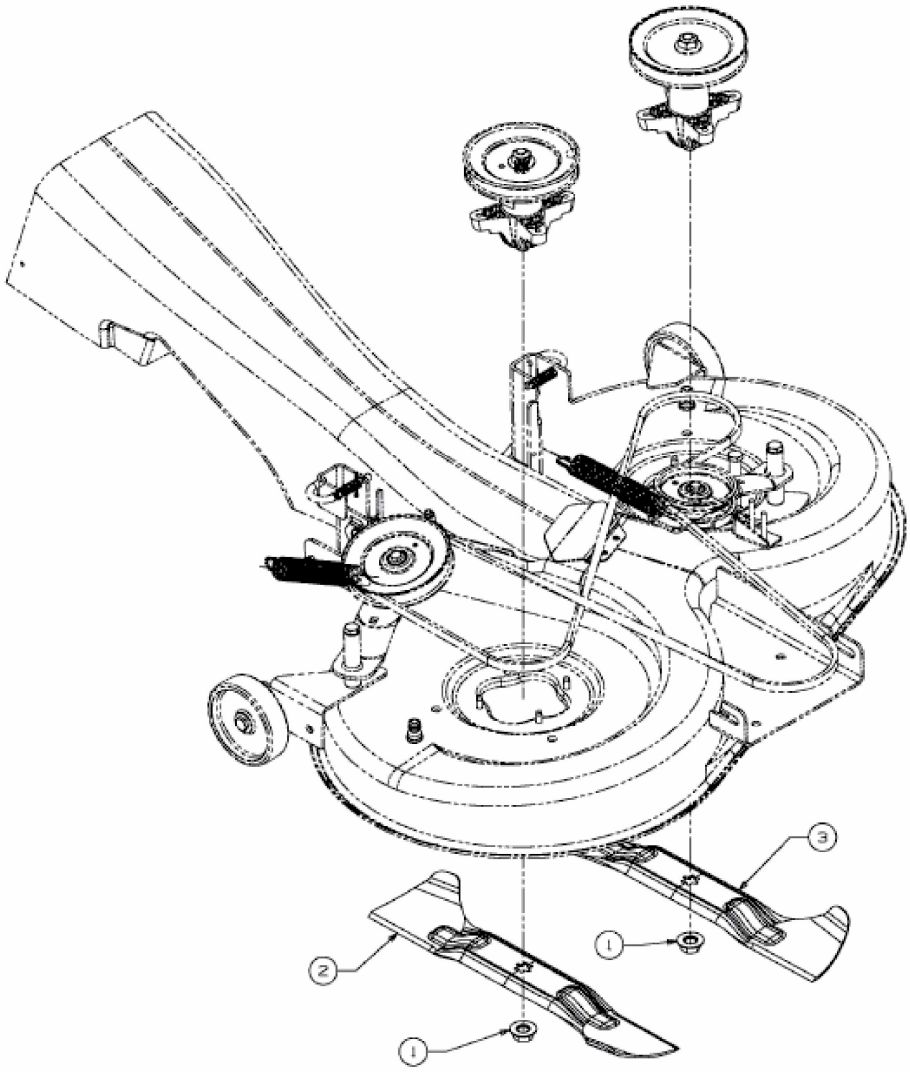

E3-03431A-01