A 96.165 H > 13HN79WF650 (2015) > PARKBREMSE

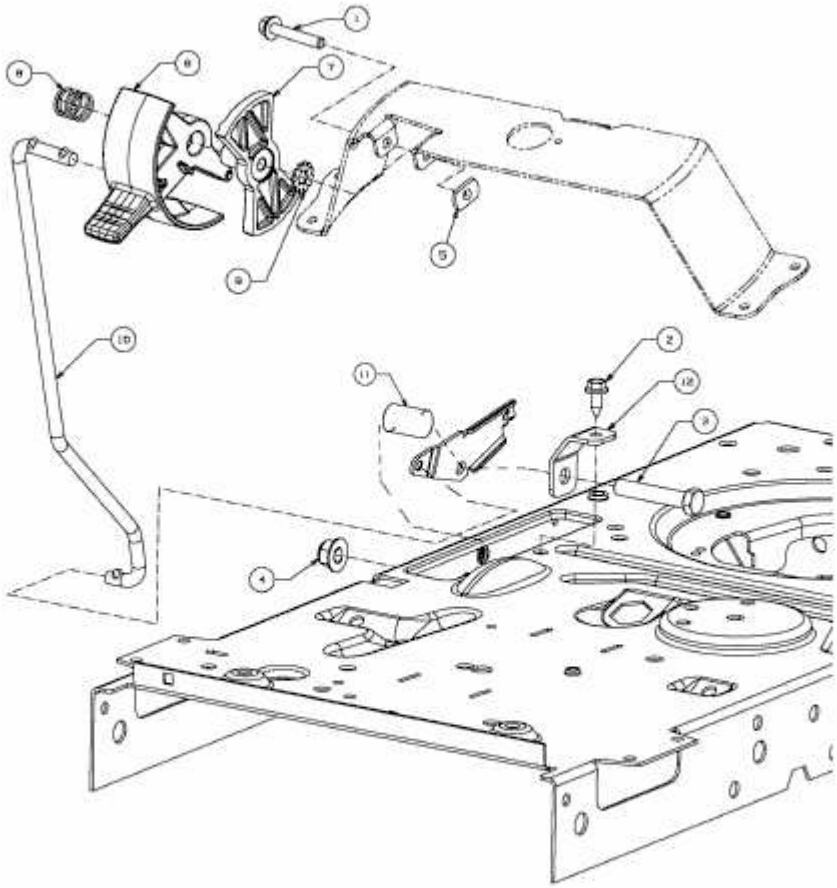

E3-07437B-01