A 92.165 H > 13HN71WE650 (2015) > LENKUNG

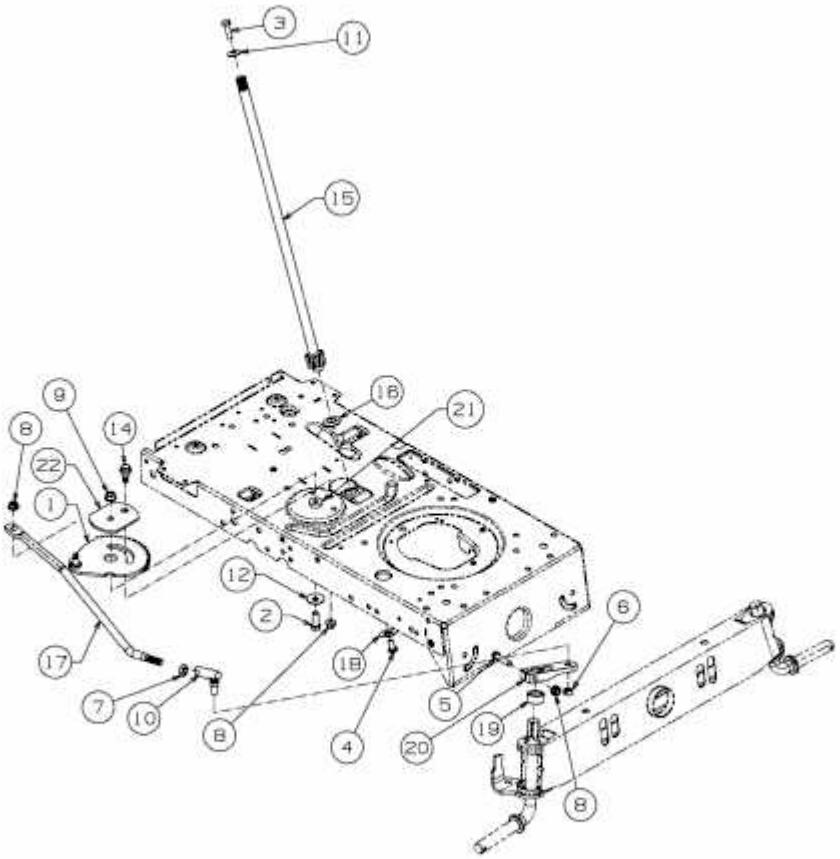

E3-02700F-01