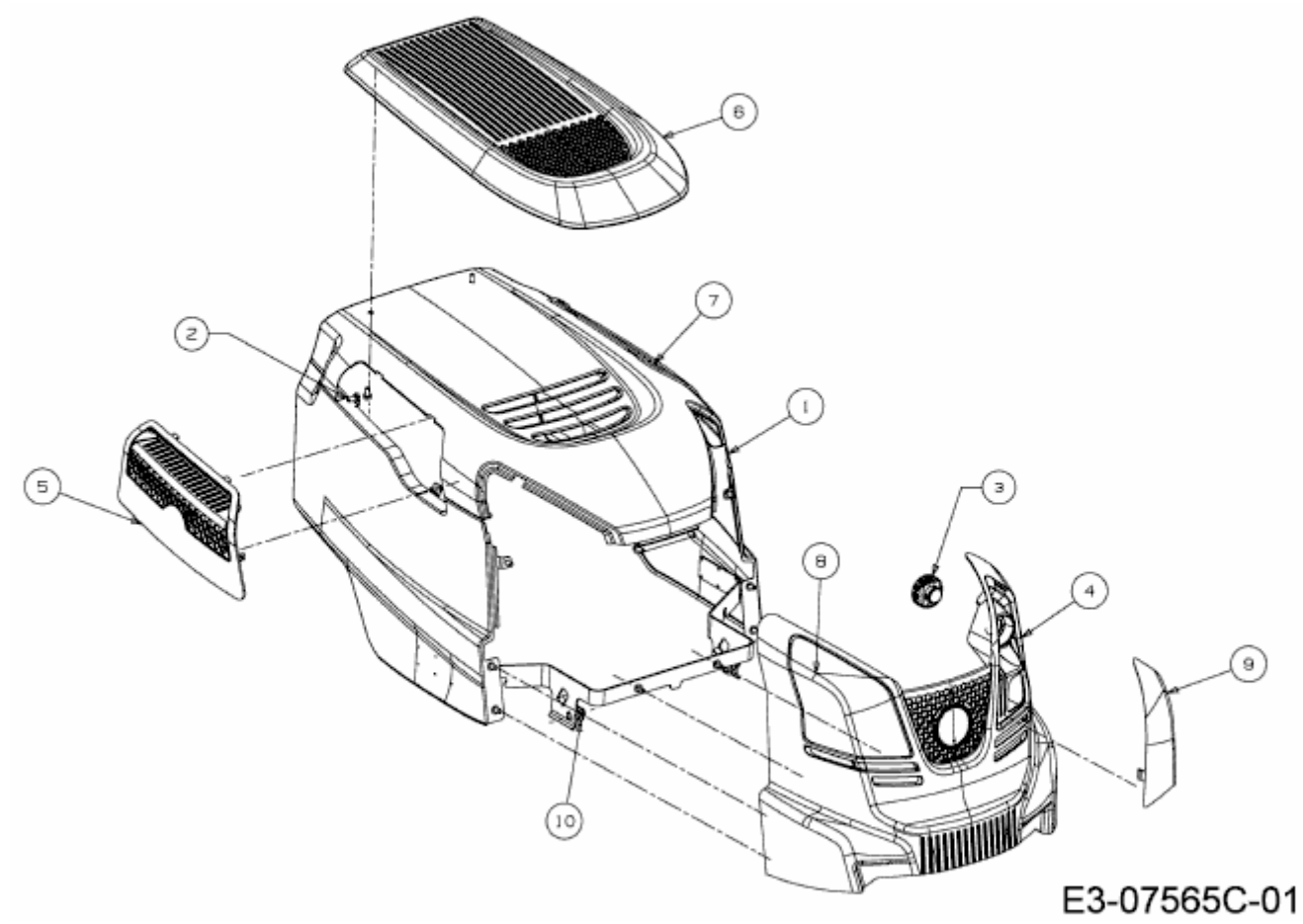EXPERT 92.155 H > 13HM99WE650 (2016) > MOTORHAUBE W-STYLE