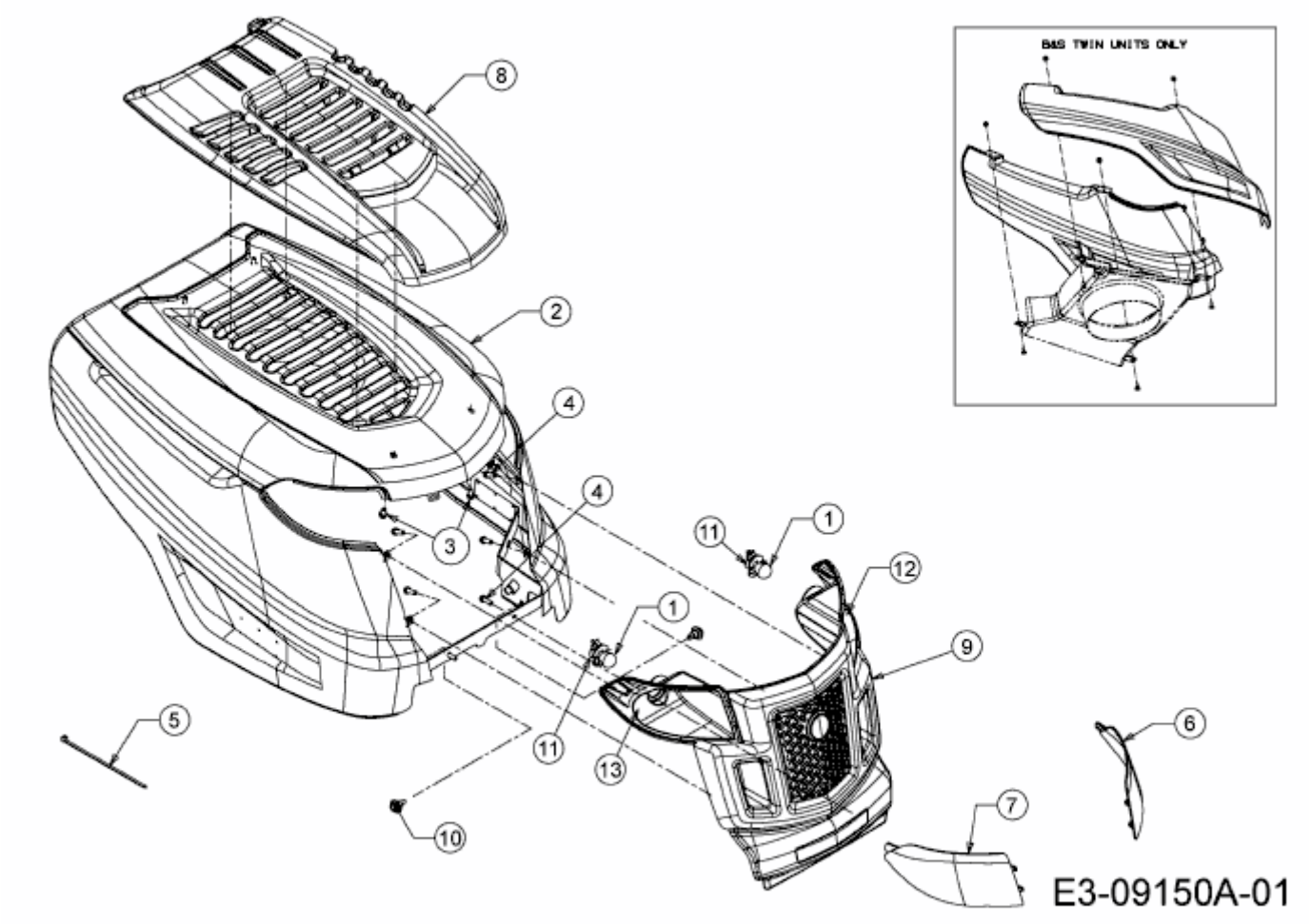LTEX 92 A > 13HM98KE682 (2015) > MOTORHAUBE K-STYLE