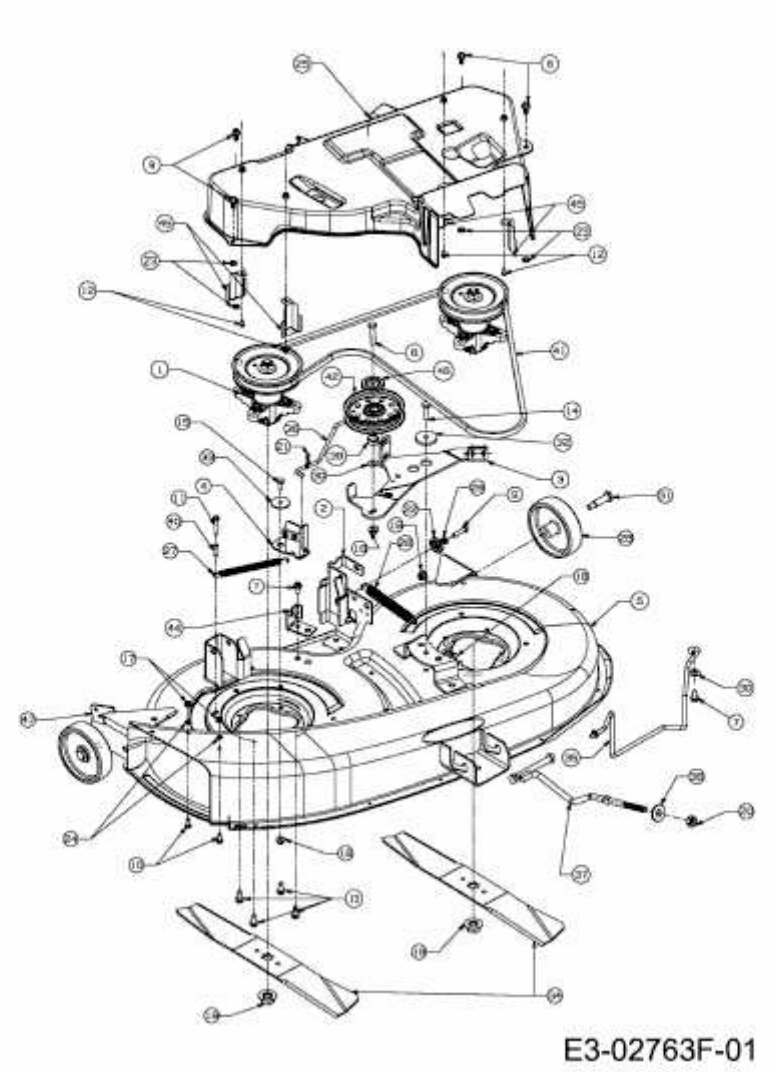AMBITION 96.155 H > 13HM79RF650 (2014) > MÄHWERK F (38"/96CM)