OPTIMA LF 145 H > 13HM79KF678 (2016) > LENKUNG

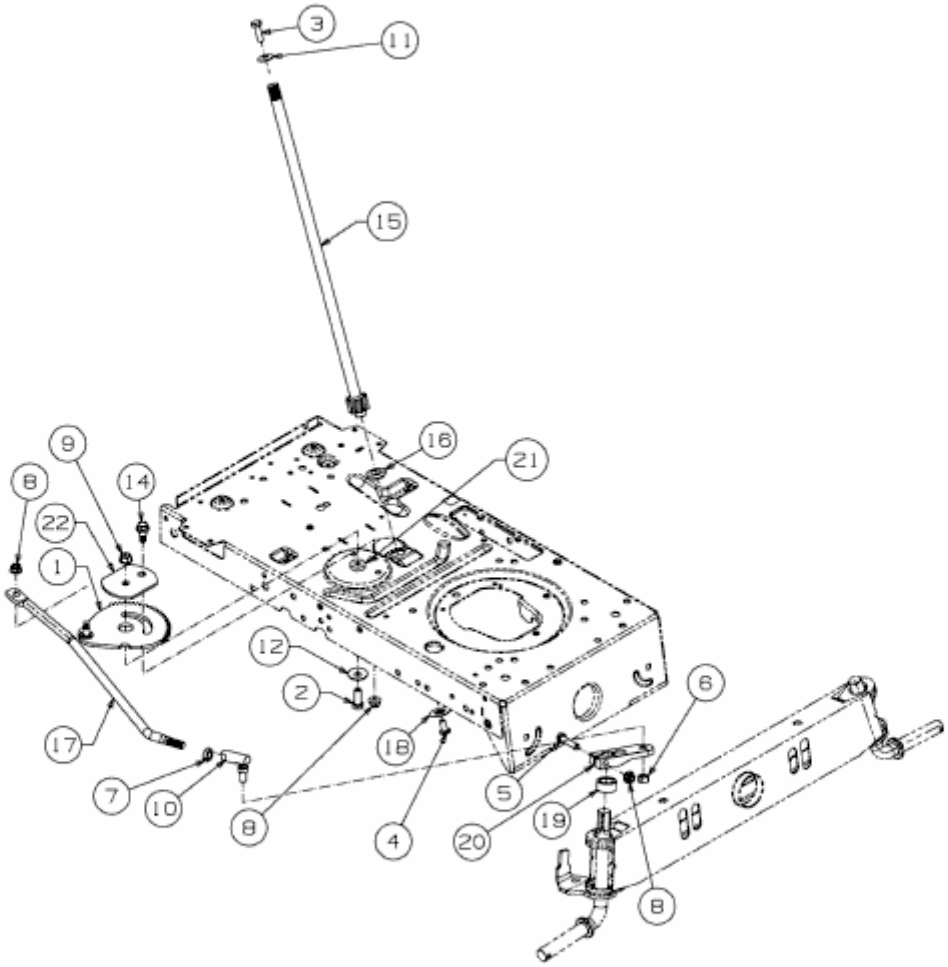

E3-02700F-01