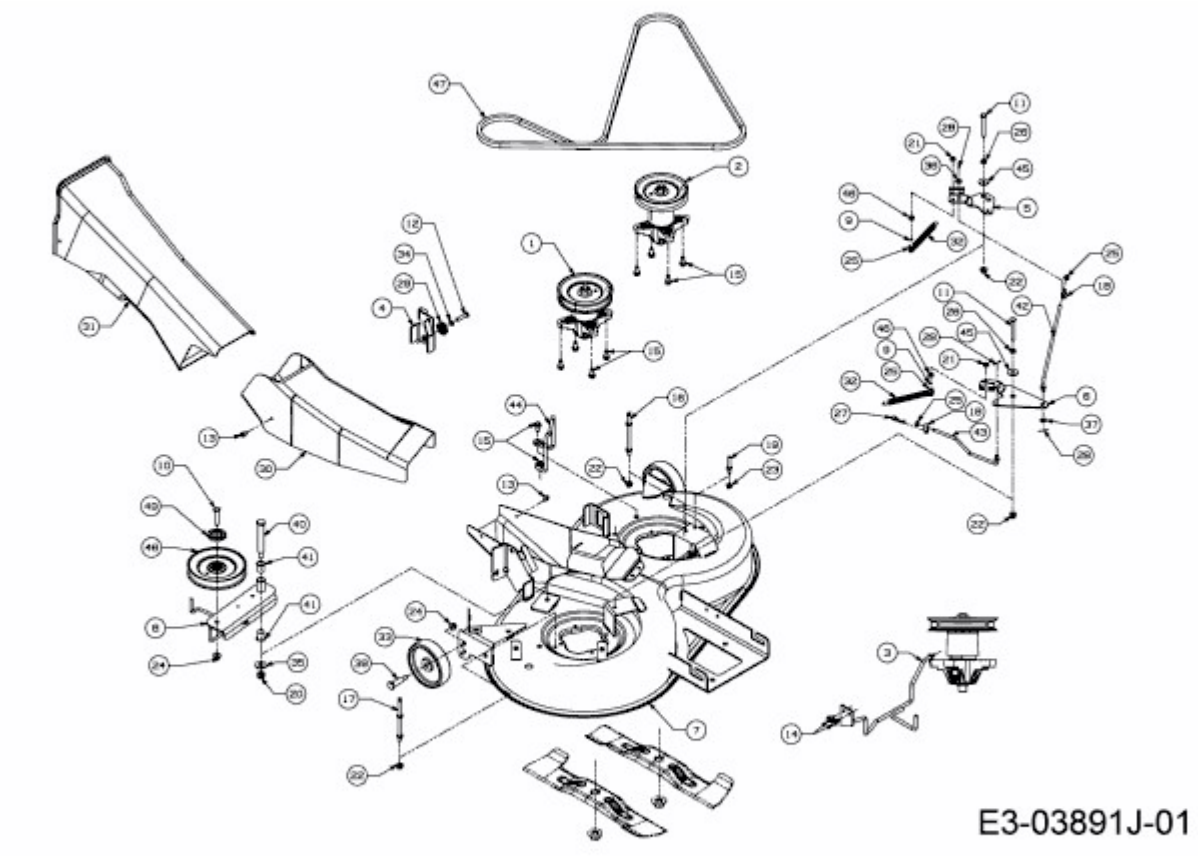RT 155-92 H > 13HM77TE694 (2016) > MÄHWERK E (36"/92CM)