RT 155-92 H > 13HM77TE694 (2015) > LENKUNG

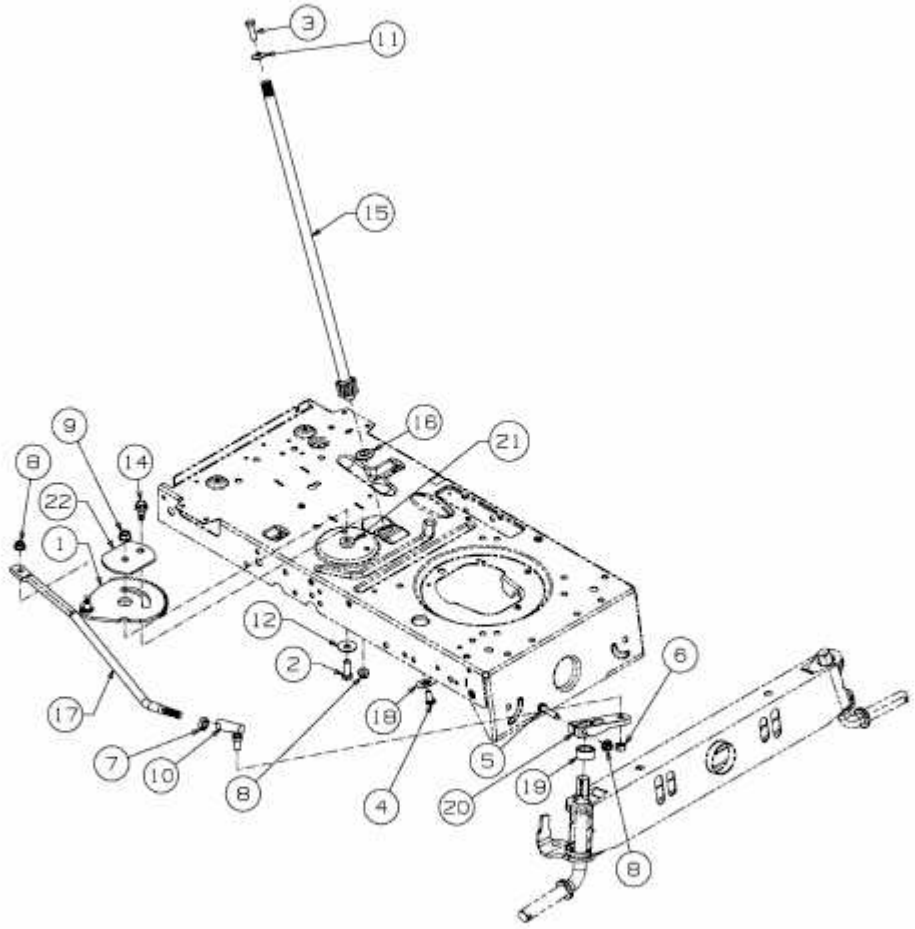

E3-02700F-01