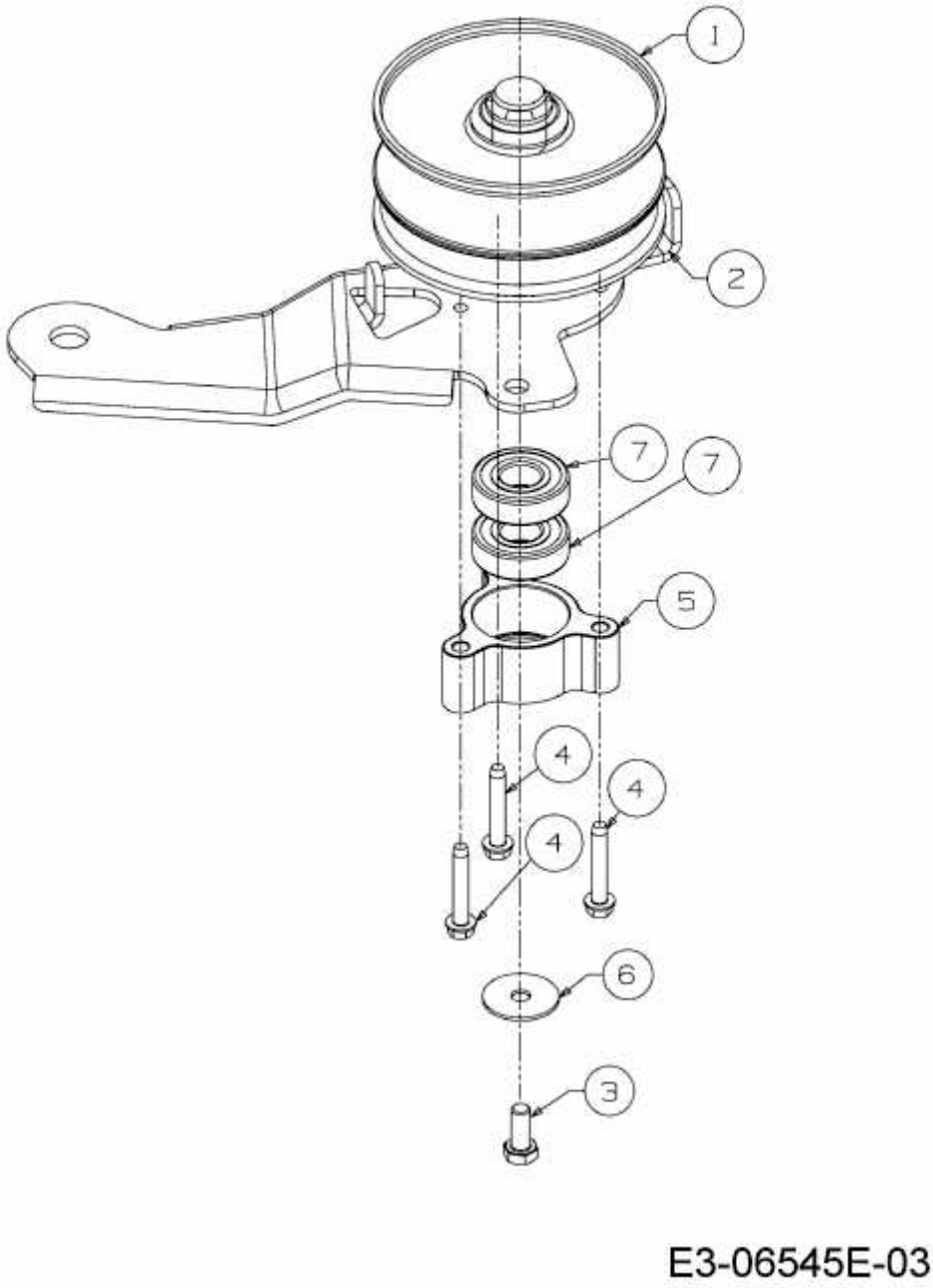OPTIMA LG 155 > 13HM77KG678 (2016) > VARIATOR