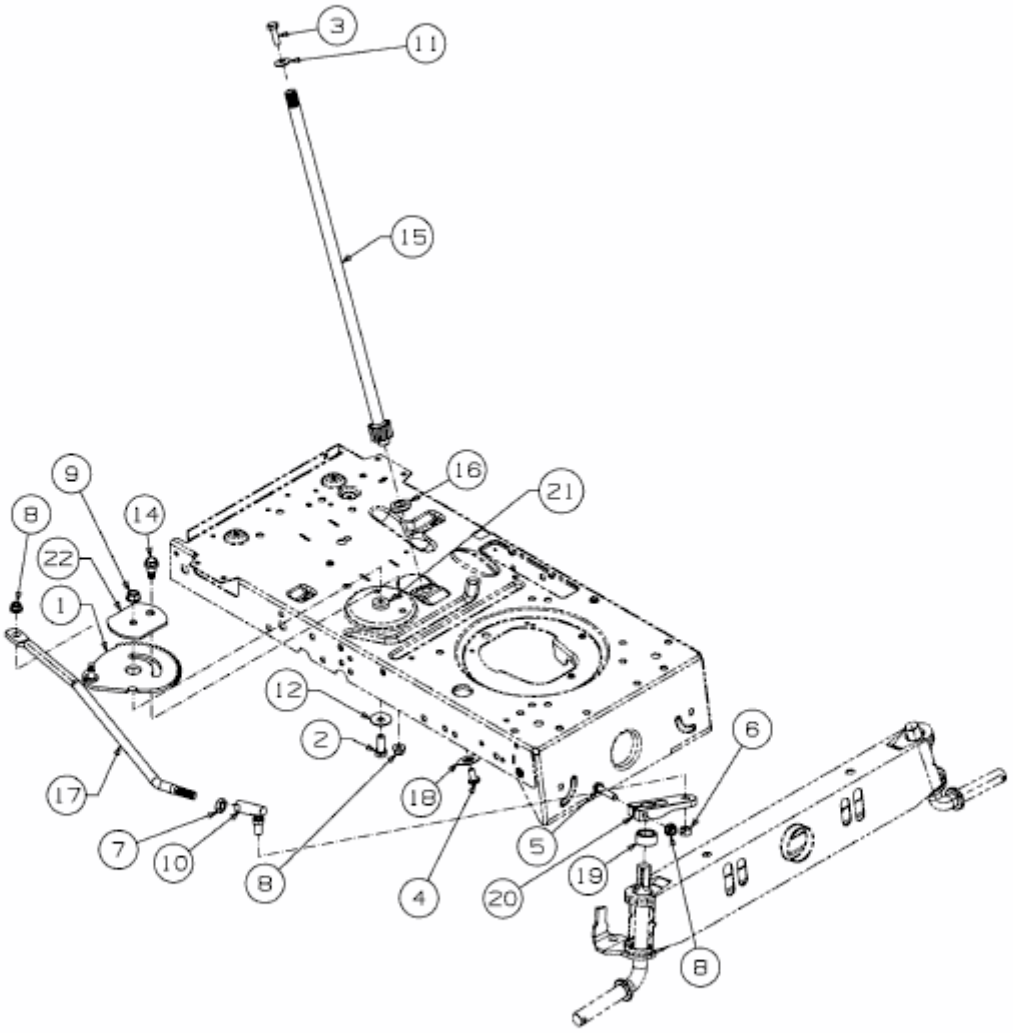


E3-02700F-01