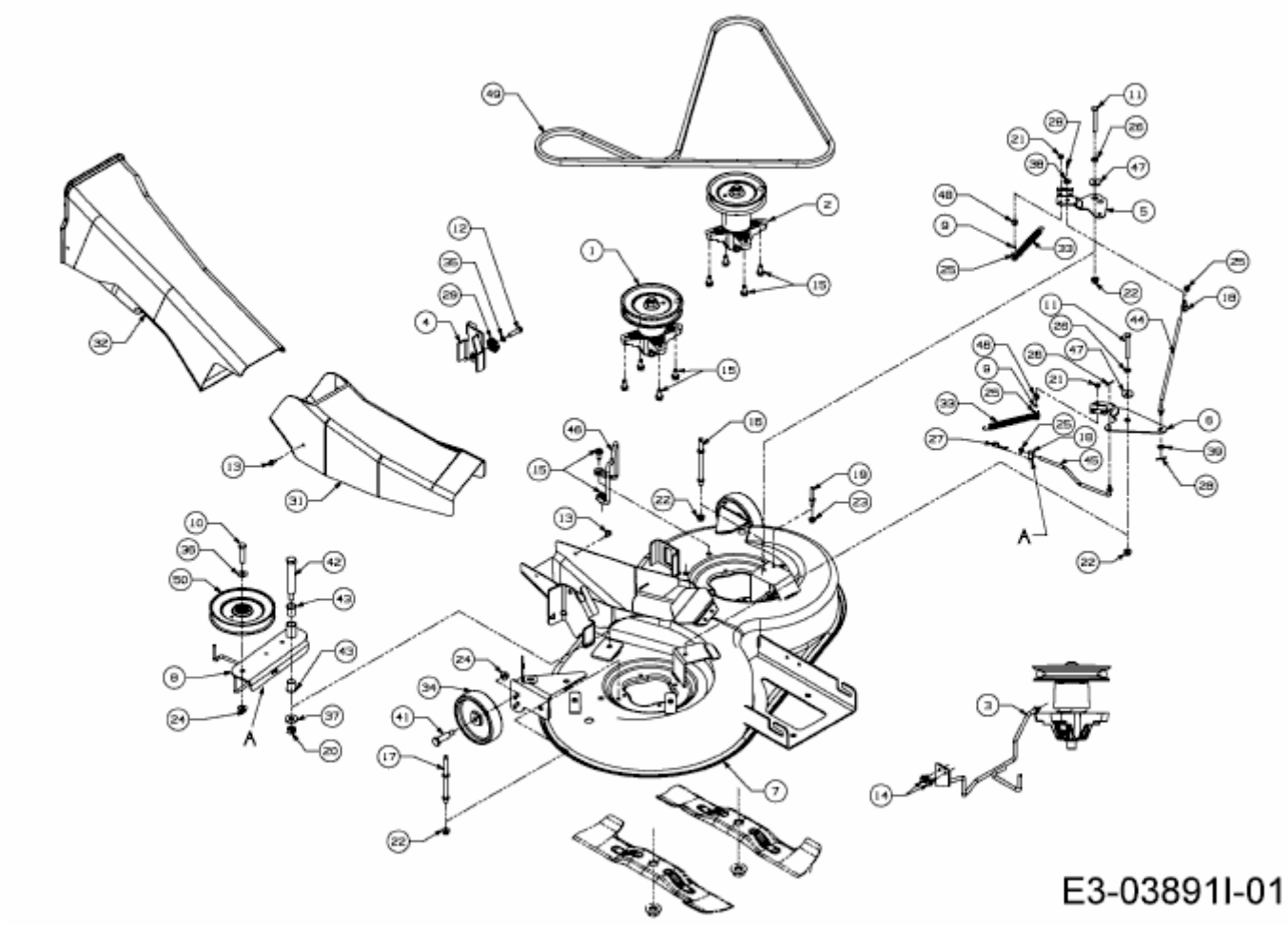LTEX 92 T > 13HM76KE682 (2015) > MÄHWERK E (36"/92CM)