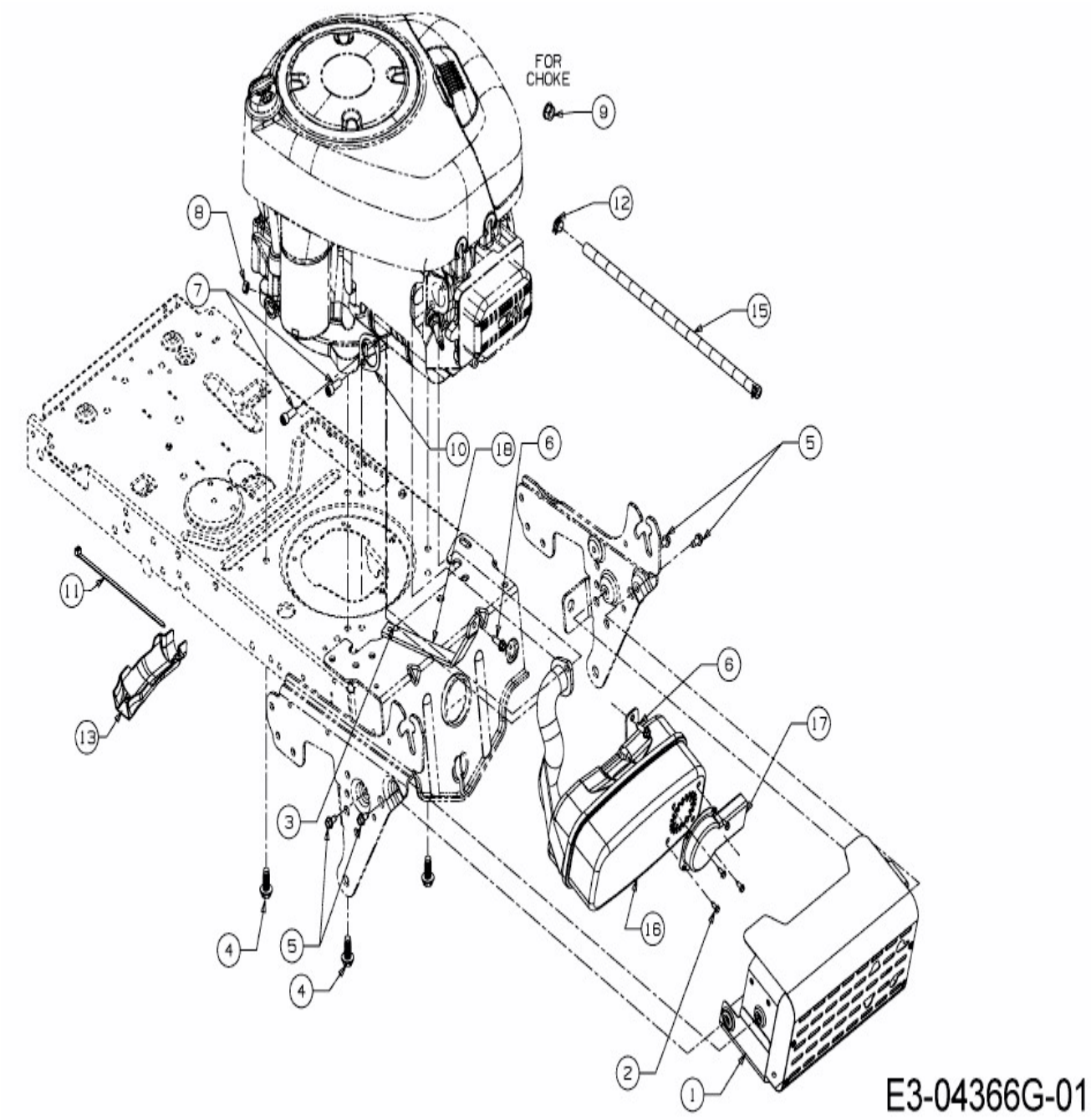
FOR
CHOKE
9
12
8
7
15
10
18
6
5
11
6
13
17
3
16
4
5
4
2
1
E3-04366G-01