BG PRO 92 HRBK > 13HM71KE655 (2017) > VORDERACHSE

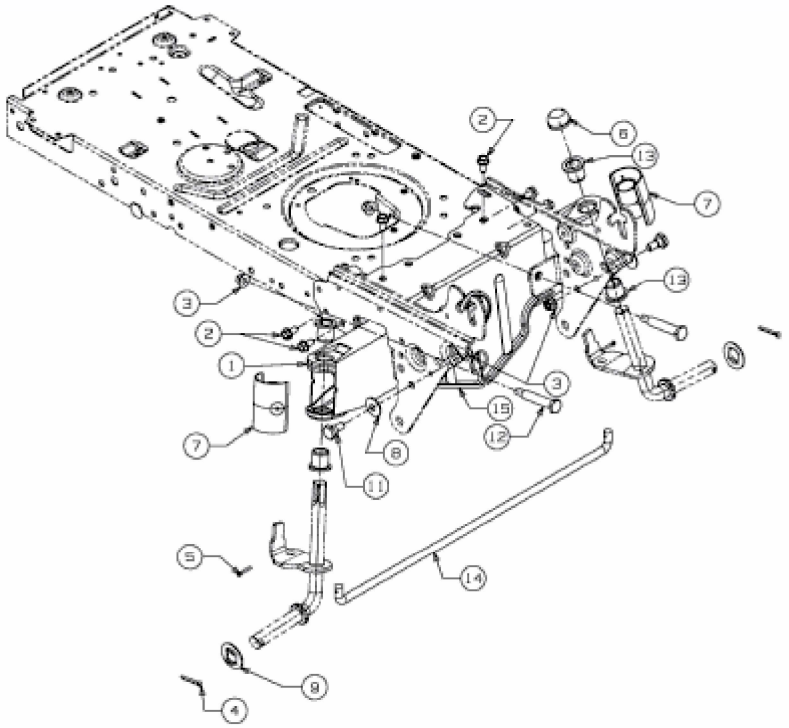

E3-04363C-01