MF 41-18 ARD > 13HJ90GN695 (2015) > ARMATURENBRETT

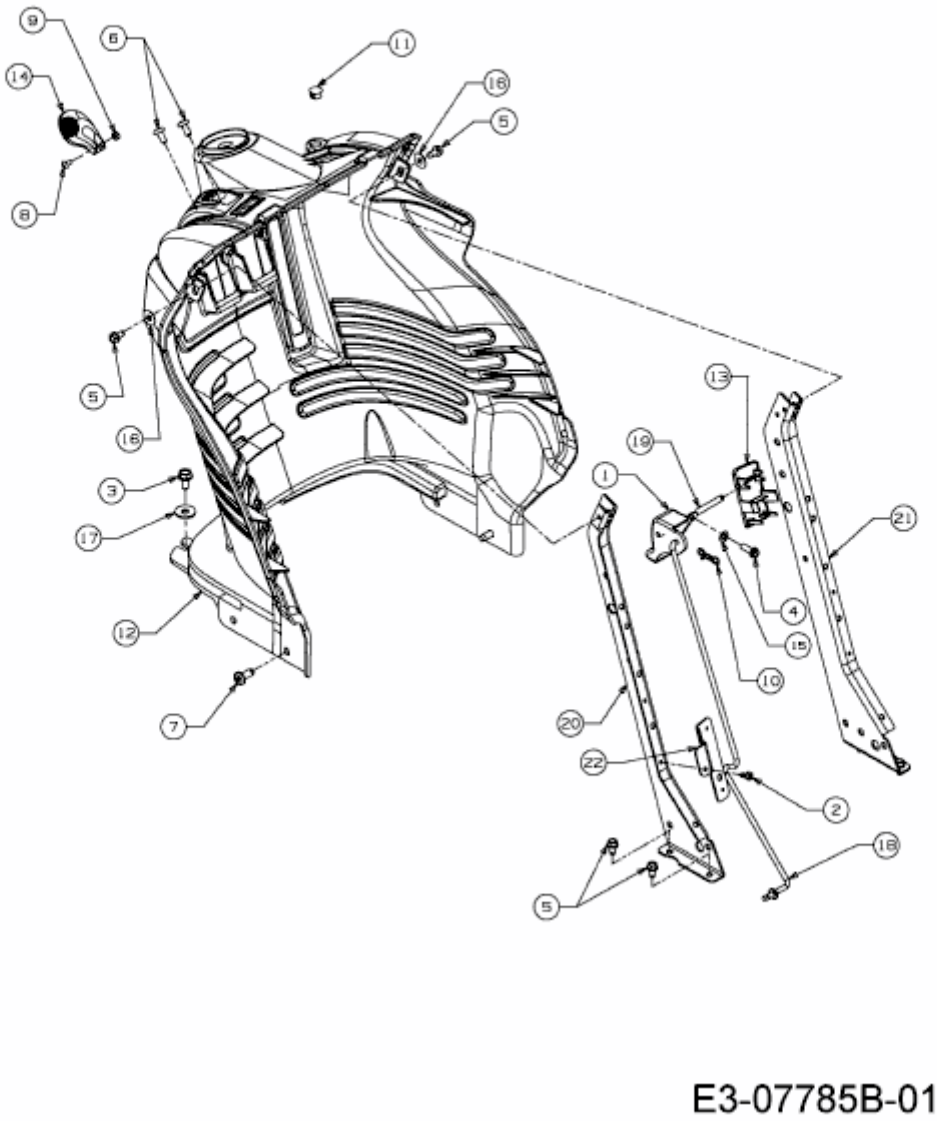

E3-07785B-01