MF 41-18 RH > 13HJ71GN695 (2015) > VORDERACHSE

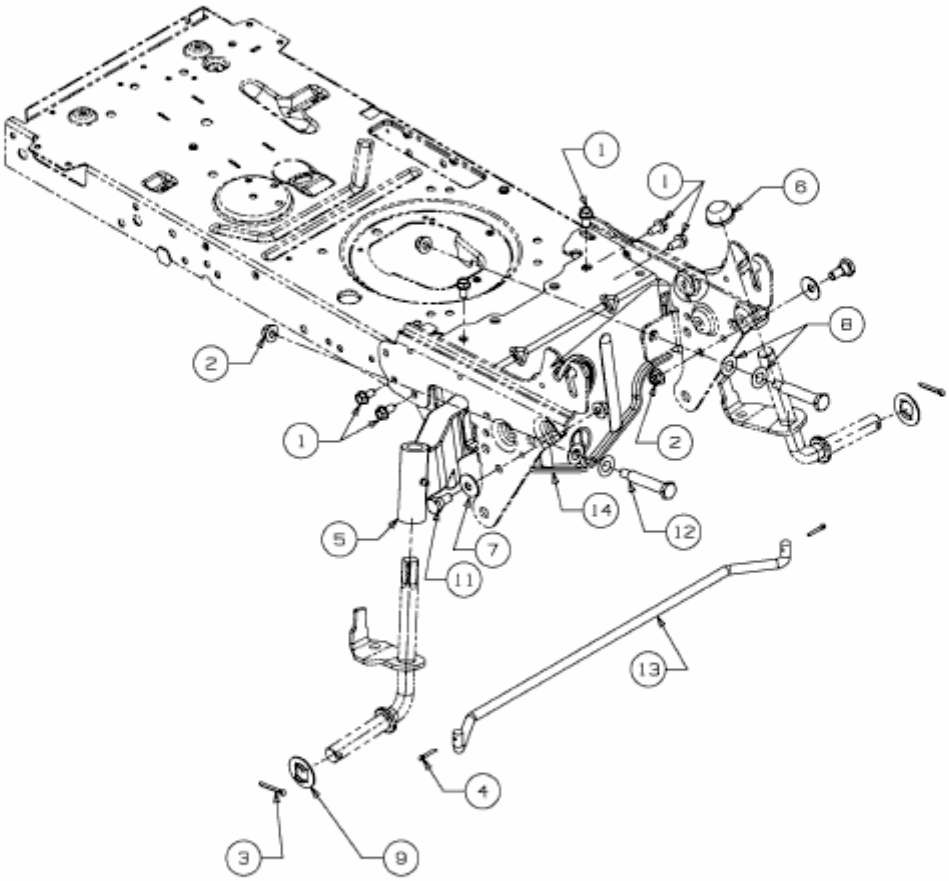


E3-05051C-01