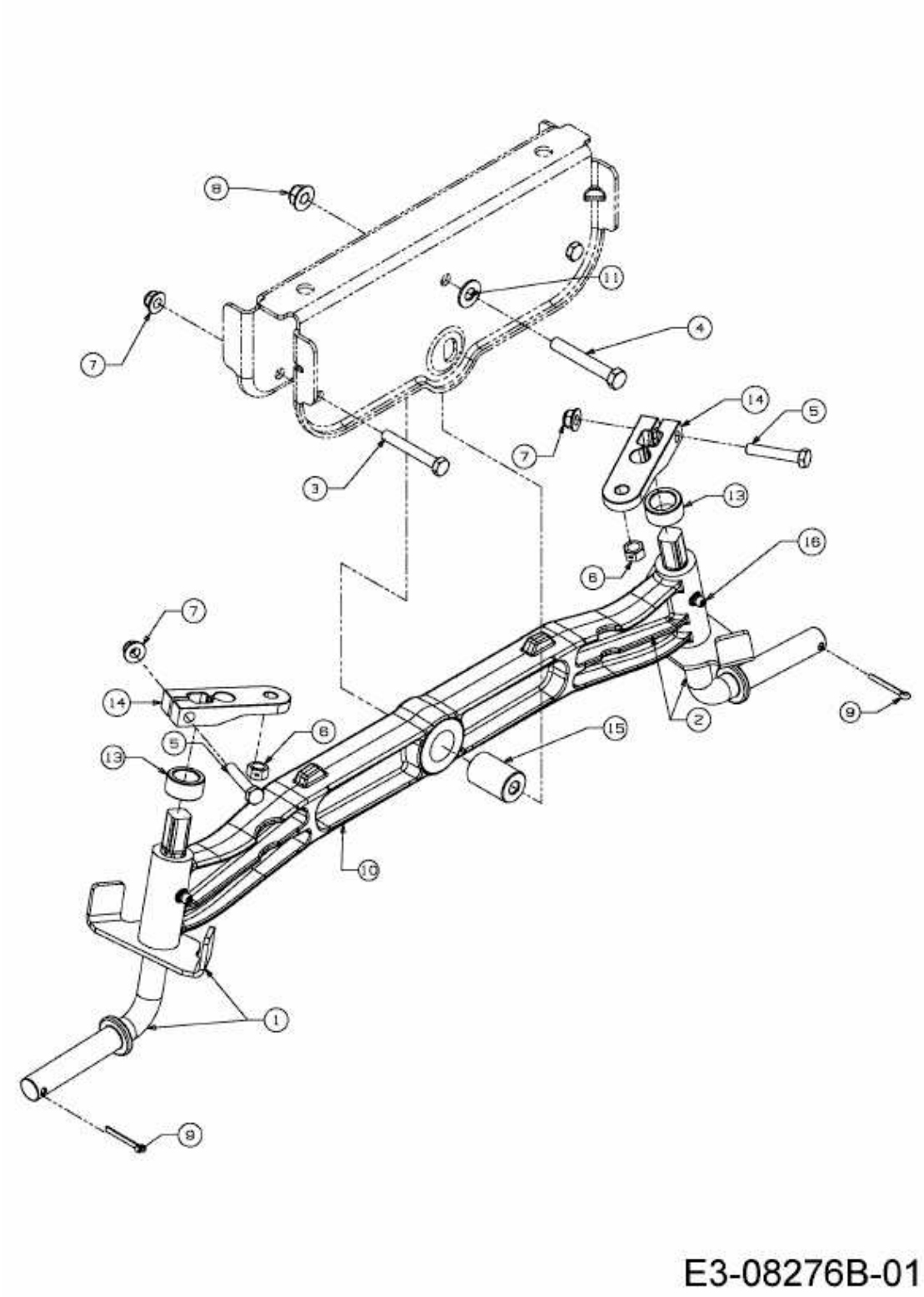282-117 TWINKH > 13HI93GT615 (2016) > VORDERACHSE