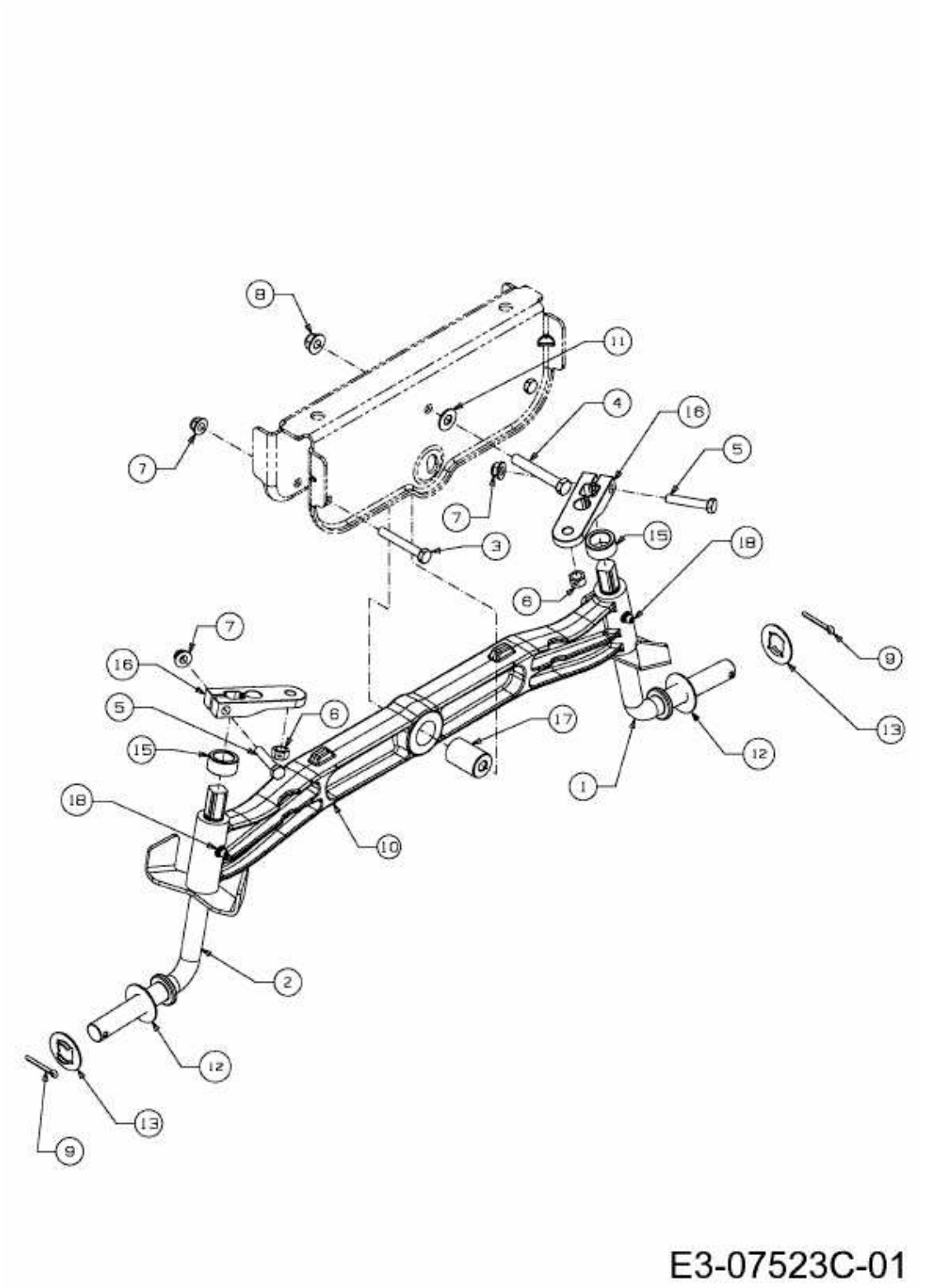GLX 105 RH-K > 13HI91GN690 (2016) > VORDERACHSE