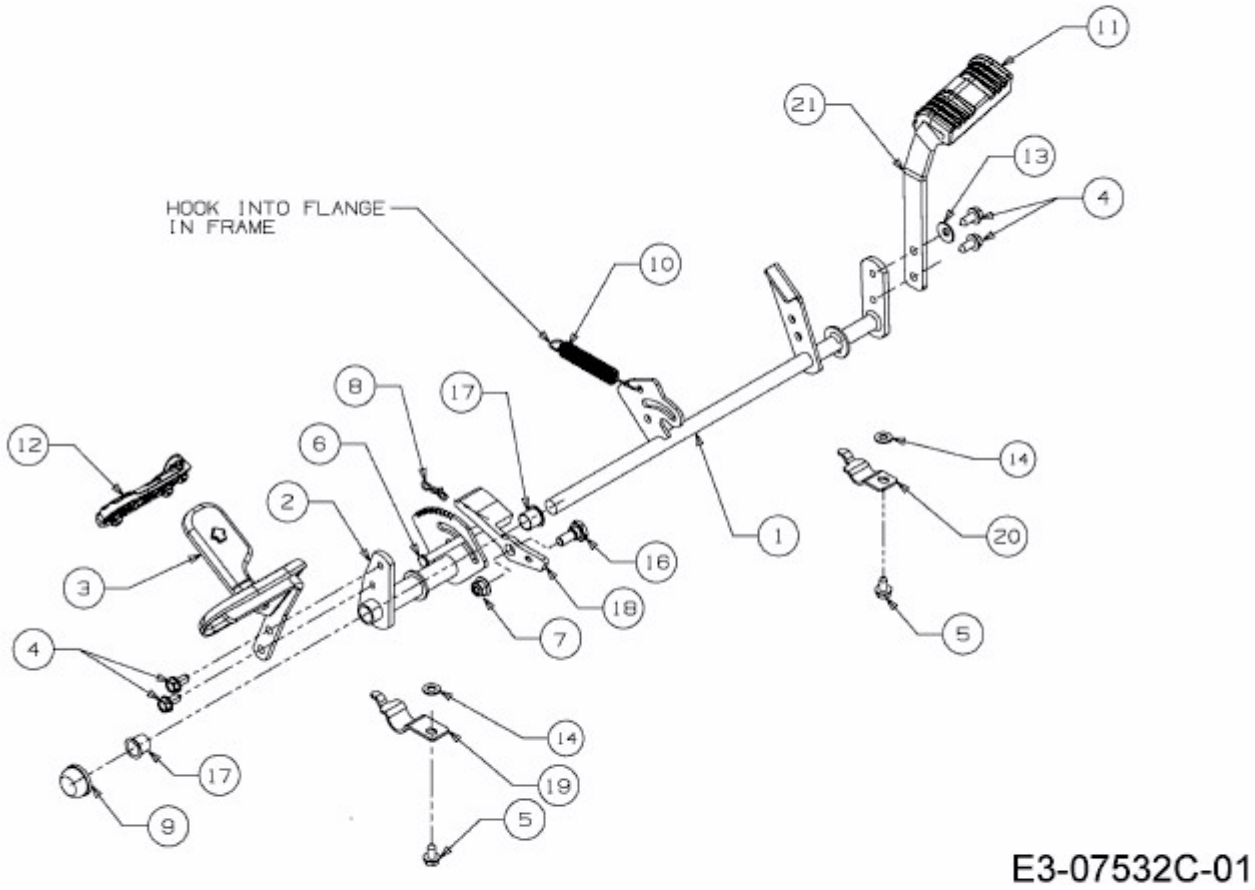GL 13,5-92 H > 13HH993E640 (2014) > PEDALWELLE