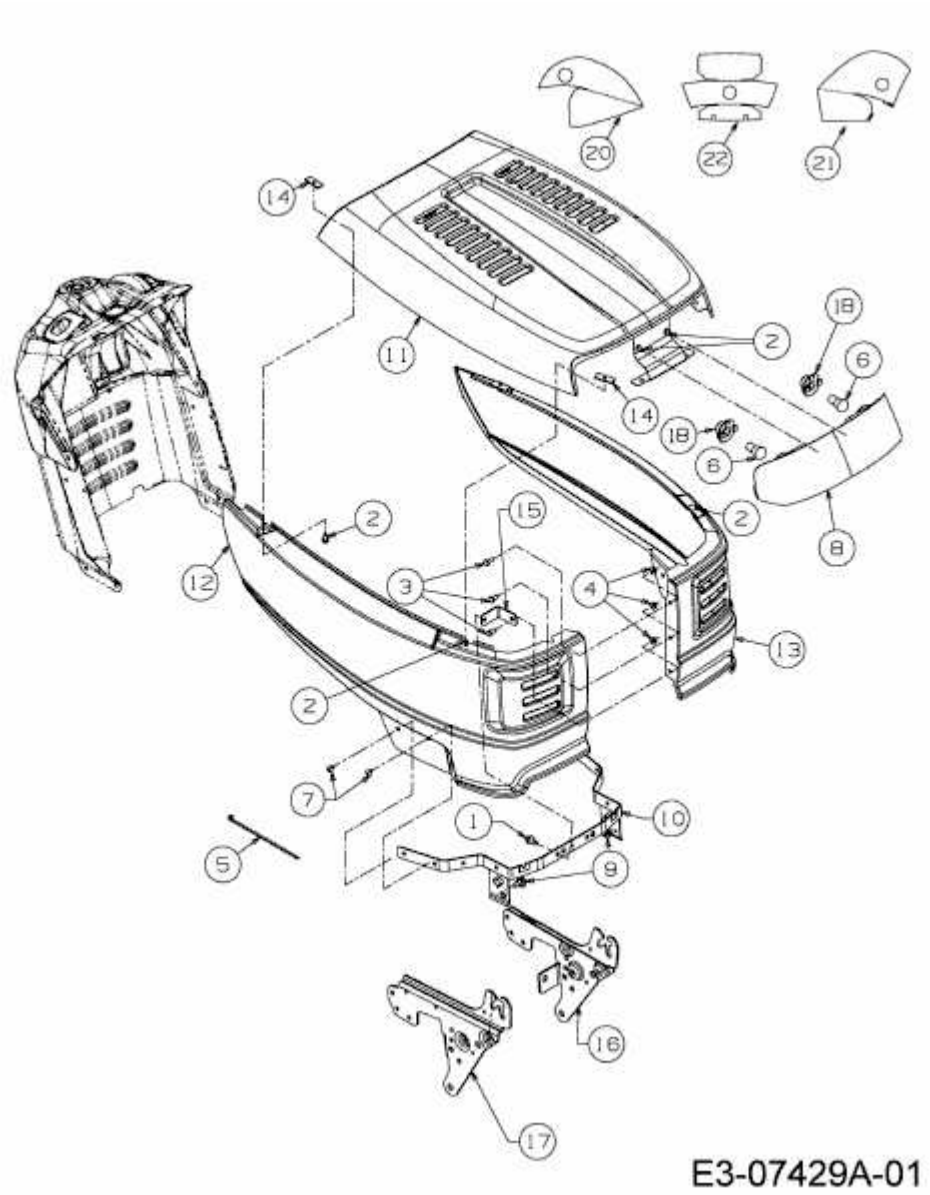RT 135-96 S > 13HH77TF694 (2015) > MOTORHAUBE T-STYLE