SMART RE 115 > 13HH765E676 (2015) > LENKUNG

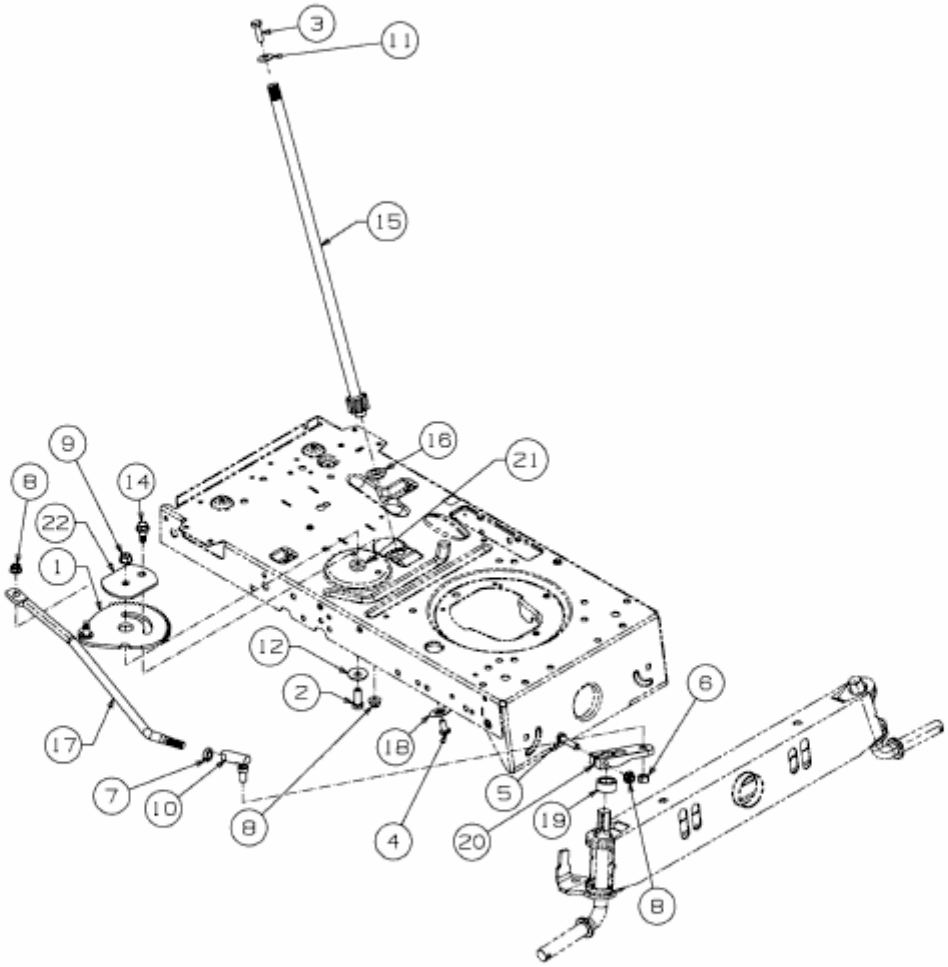

E3-02700F-01