BG 1392 RBK > 13HH765E655 (2016) > TANK

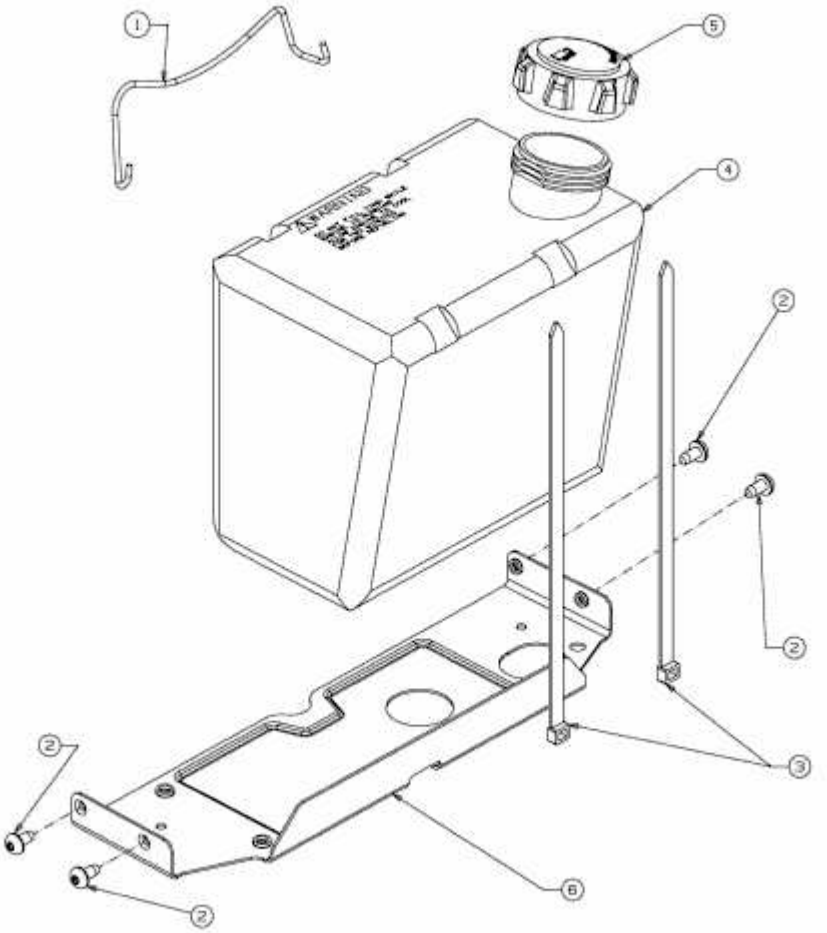

E3-07426B-01