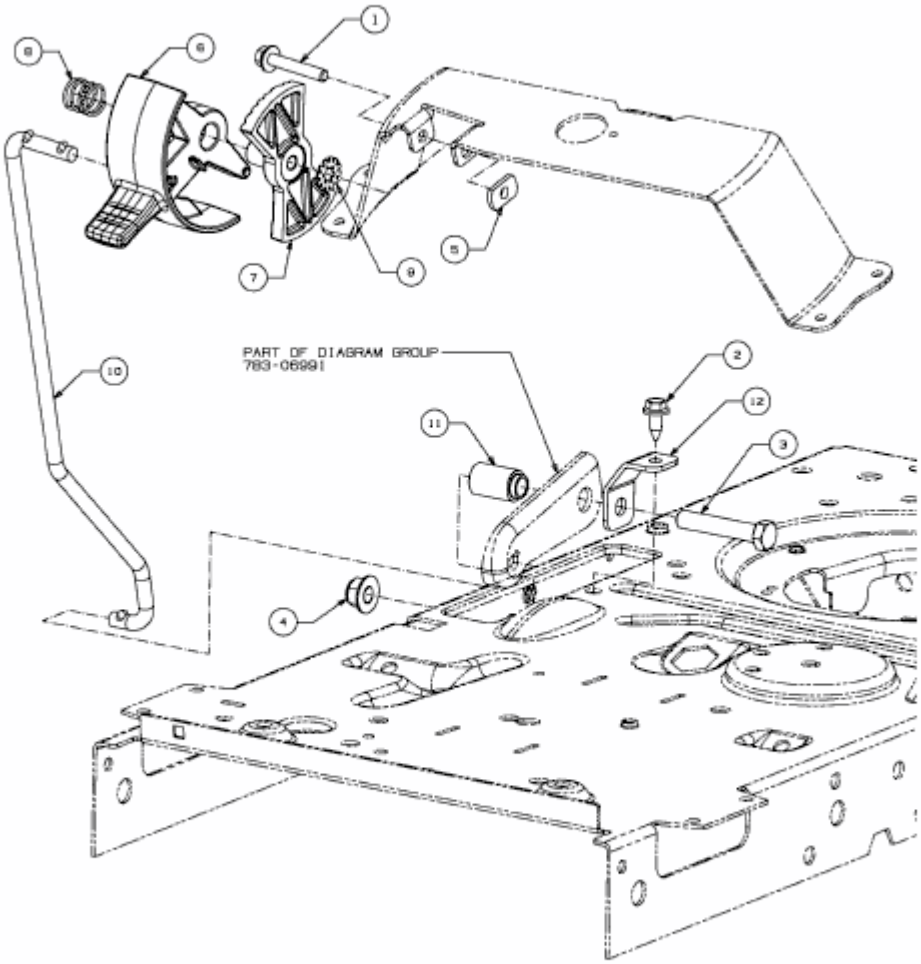

E3-07438B-01