AMBITION 92.130 H > 13HH71RE650 (2014) > TANK

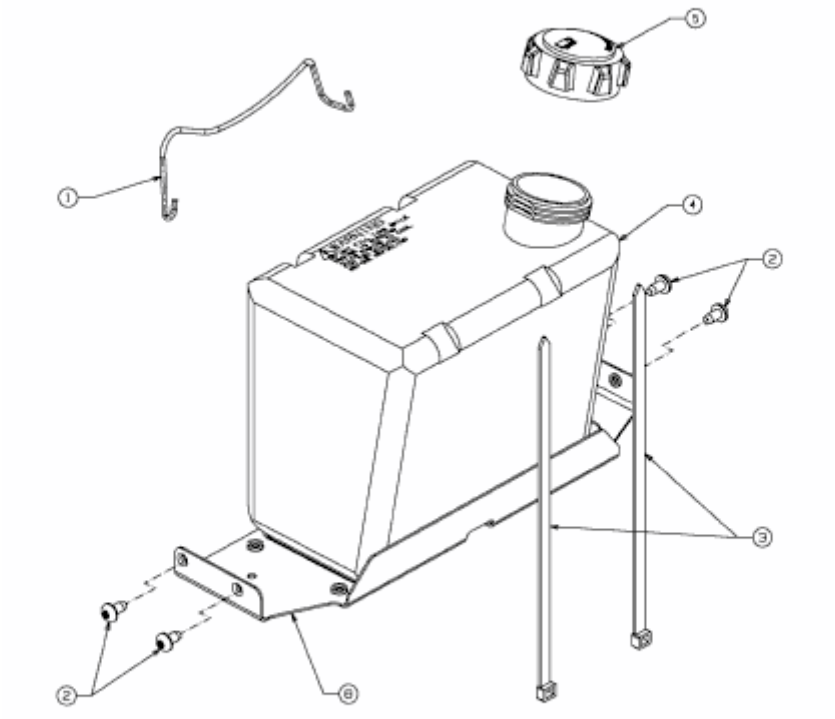

E3-07426A-01