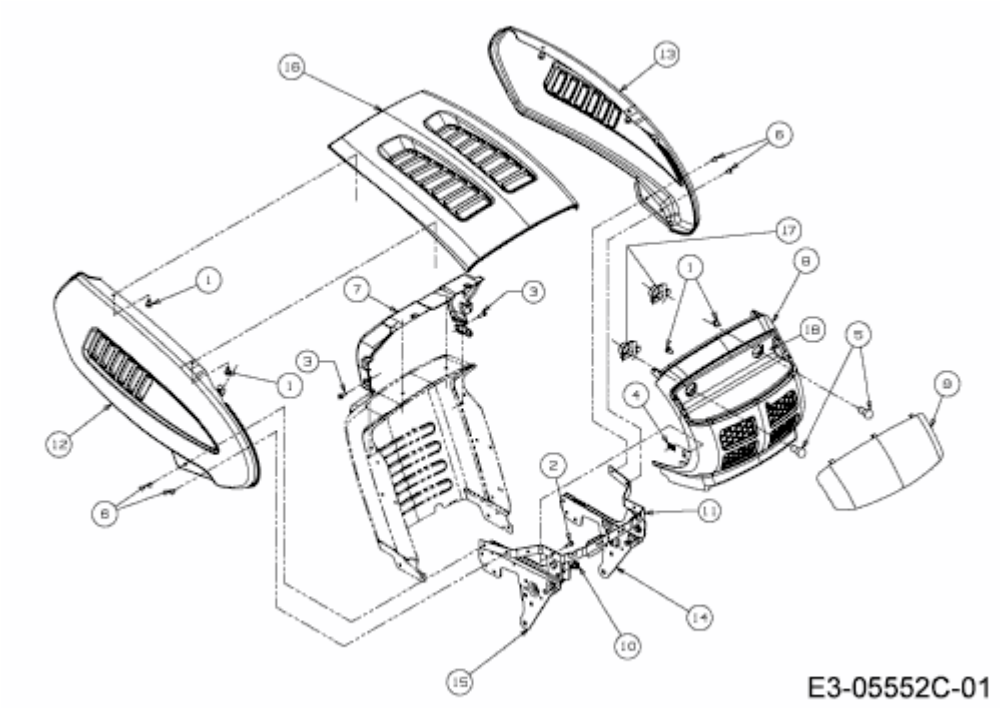BG PRO 1392 HRBK > 13HH713E655 (2015) > MOTORHAUBE 3-STYLE