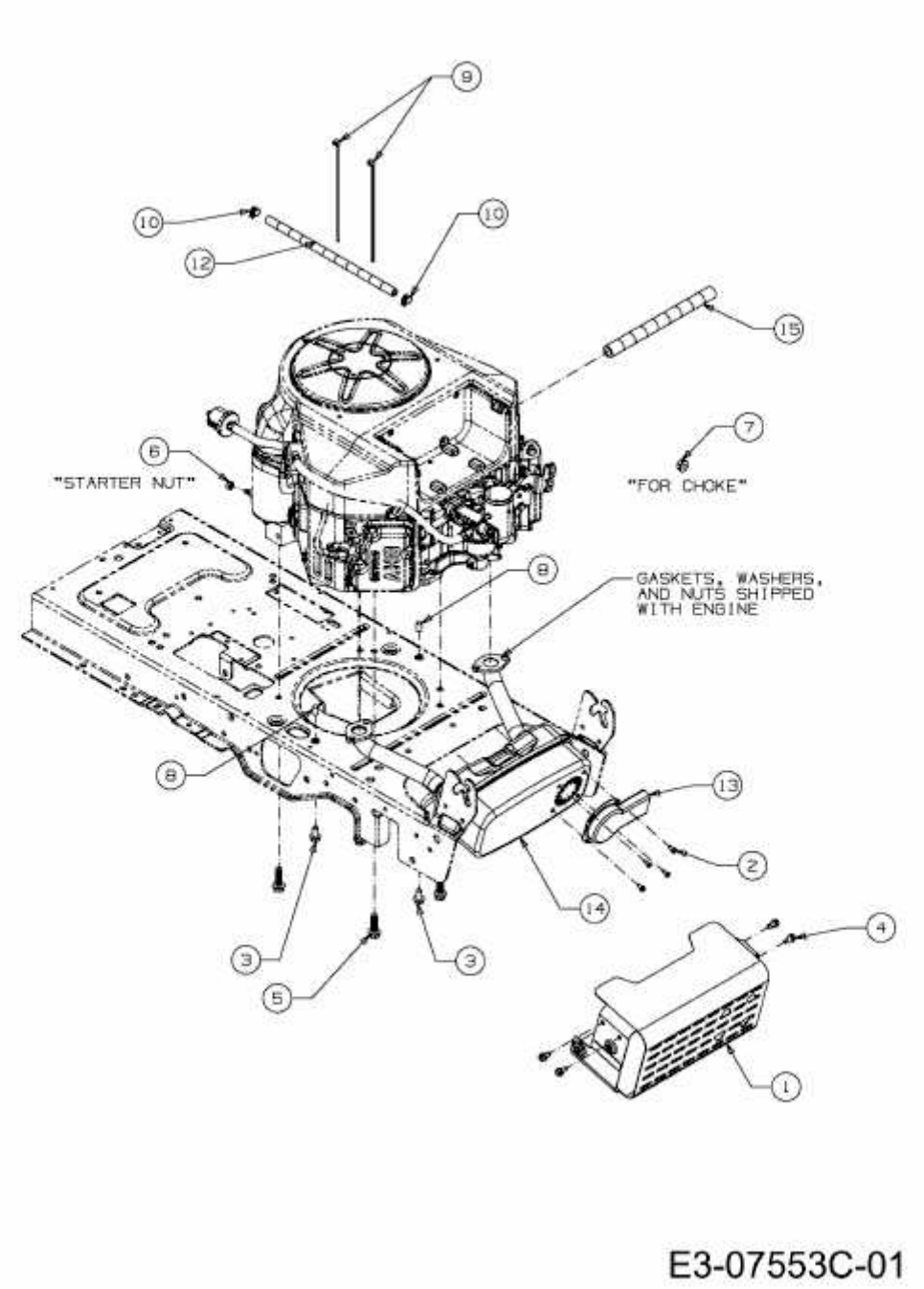EXPERT 105.180 H > 13HG91WN650 (2014) > MOTORZUBEHÖR