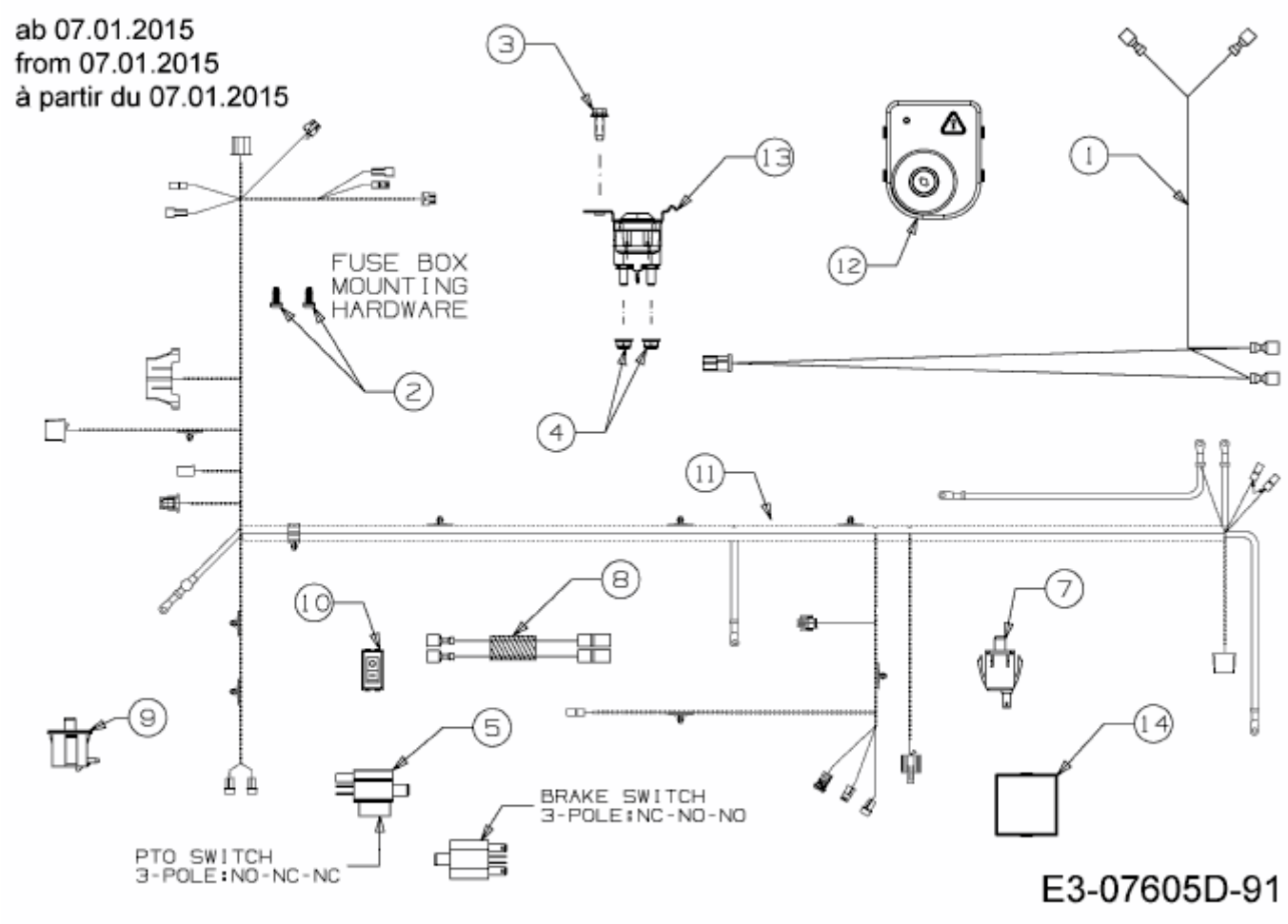
ab 07.01.2015
from 07.01.2015
à partir du 07.01.2015
FUSE BOX
MOUNTING
HARDWARE
BRAKE SWITCH
3-POLE:NC-NO-NO
PTO SWITCH
3-POLE:NO-NC-NC
E3-07605D-91