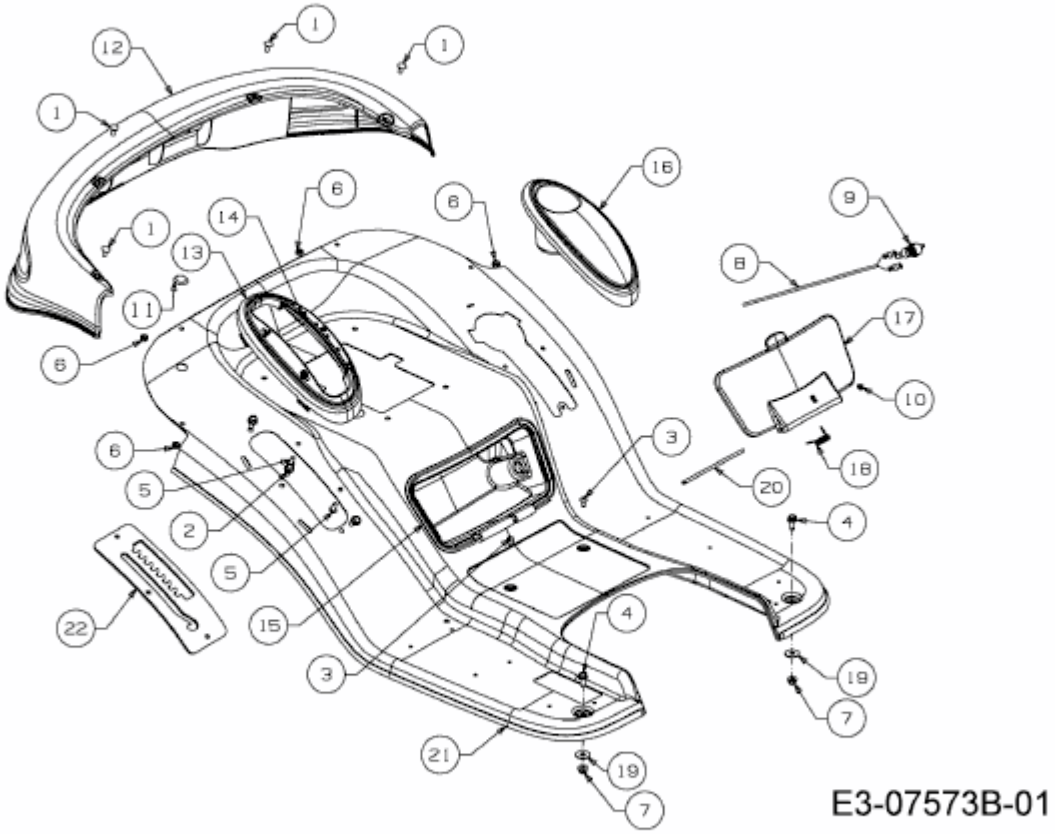CC 1022 KHI > 13HF91AI603 (2014) > SITZWANNE