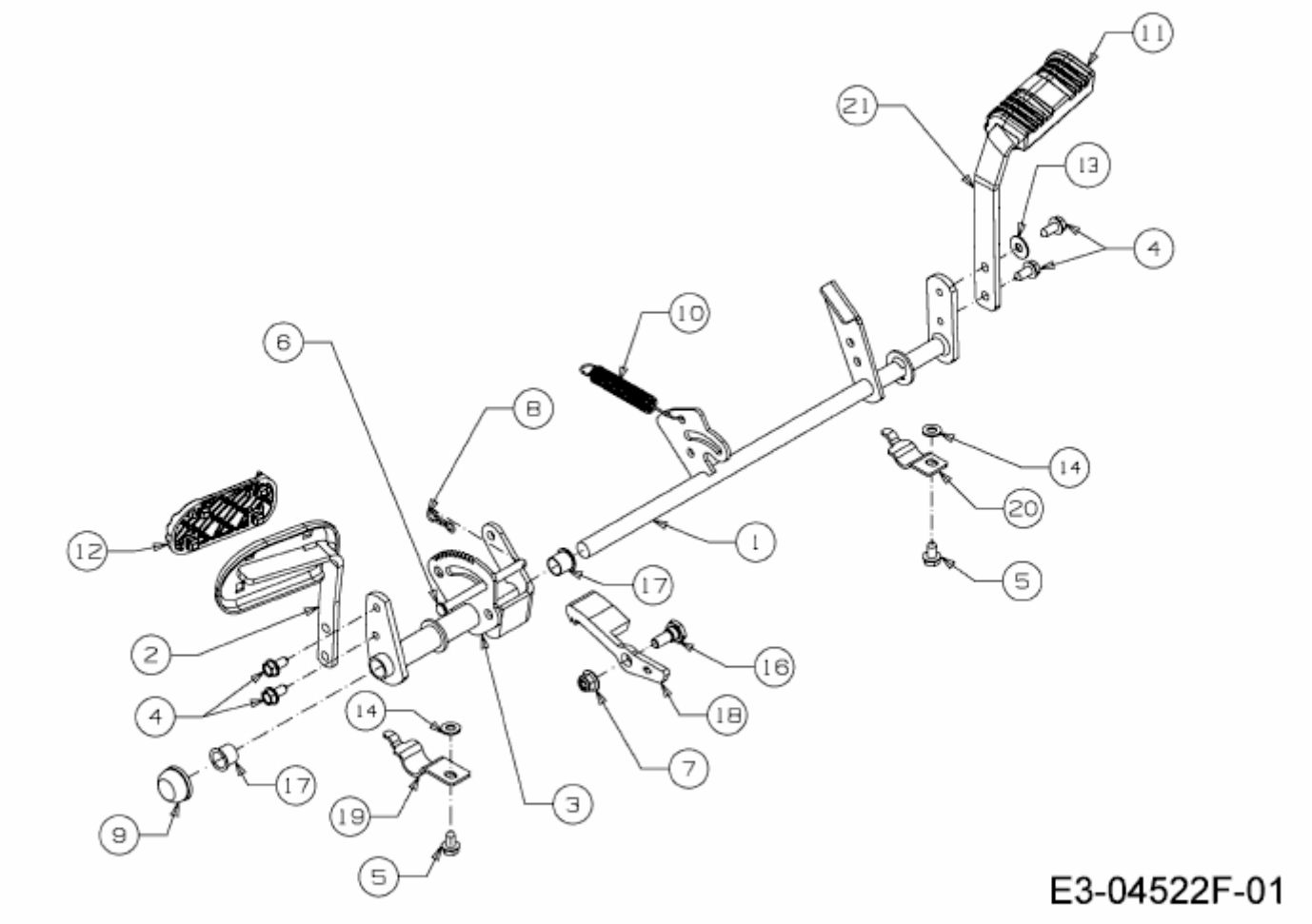MF 36-16 ARD > 13HD90GE395 (2015) > PEDALE