13HD90AE603 (2015) > VORDERACHSE

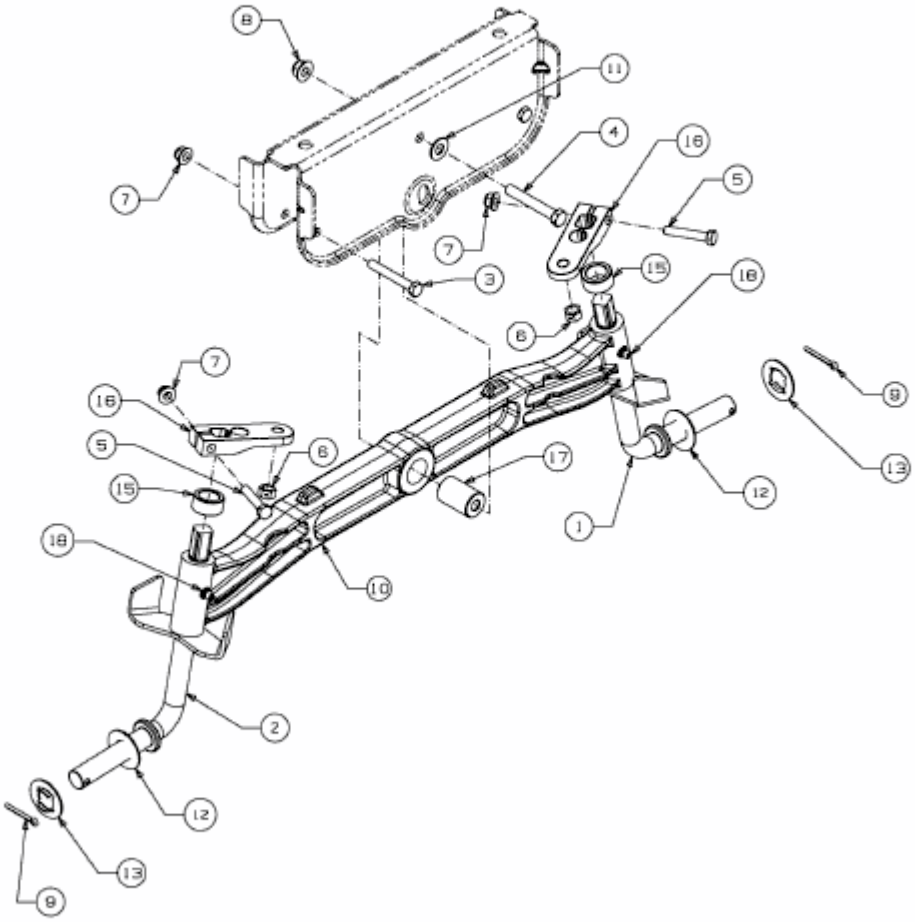

E3-07523C-01