CC 717 HN > 13HD71DN603 (2014) > SCHALTPLAN

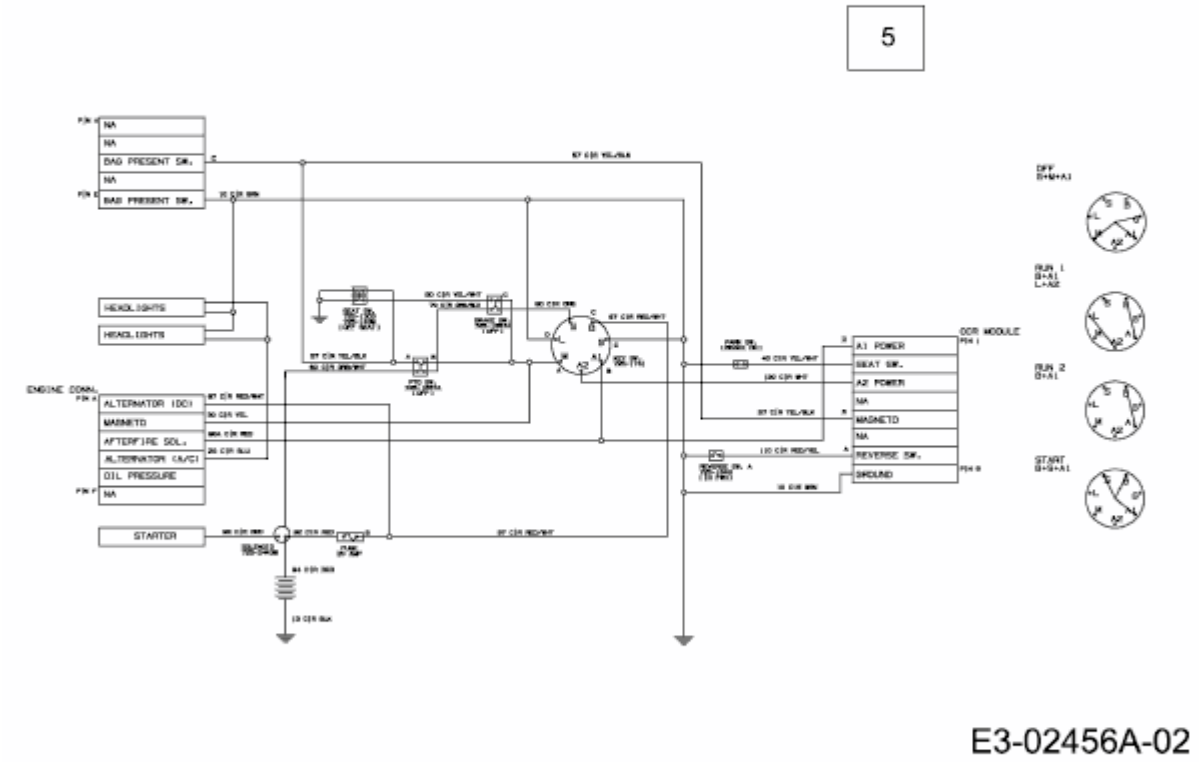

E3-02456A-02