DL 96 H > 13H2795F677 (2016) > PARKBREMSE

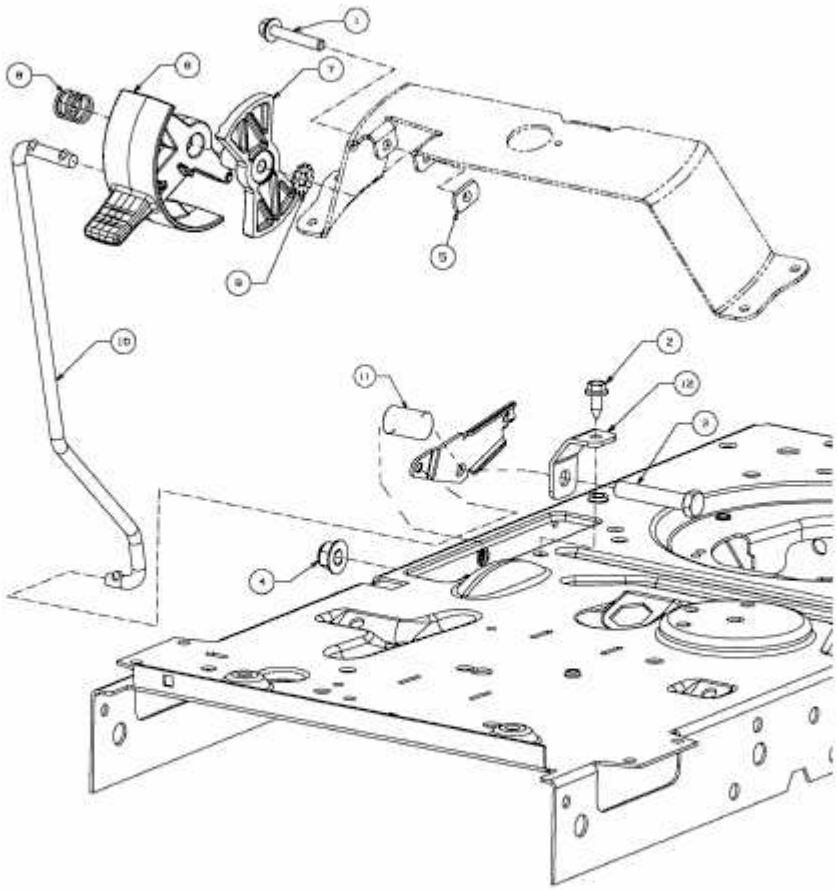

E3-07437B-01