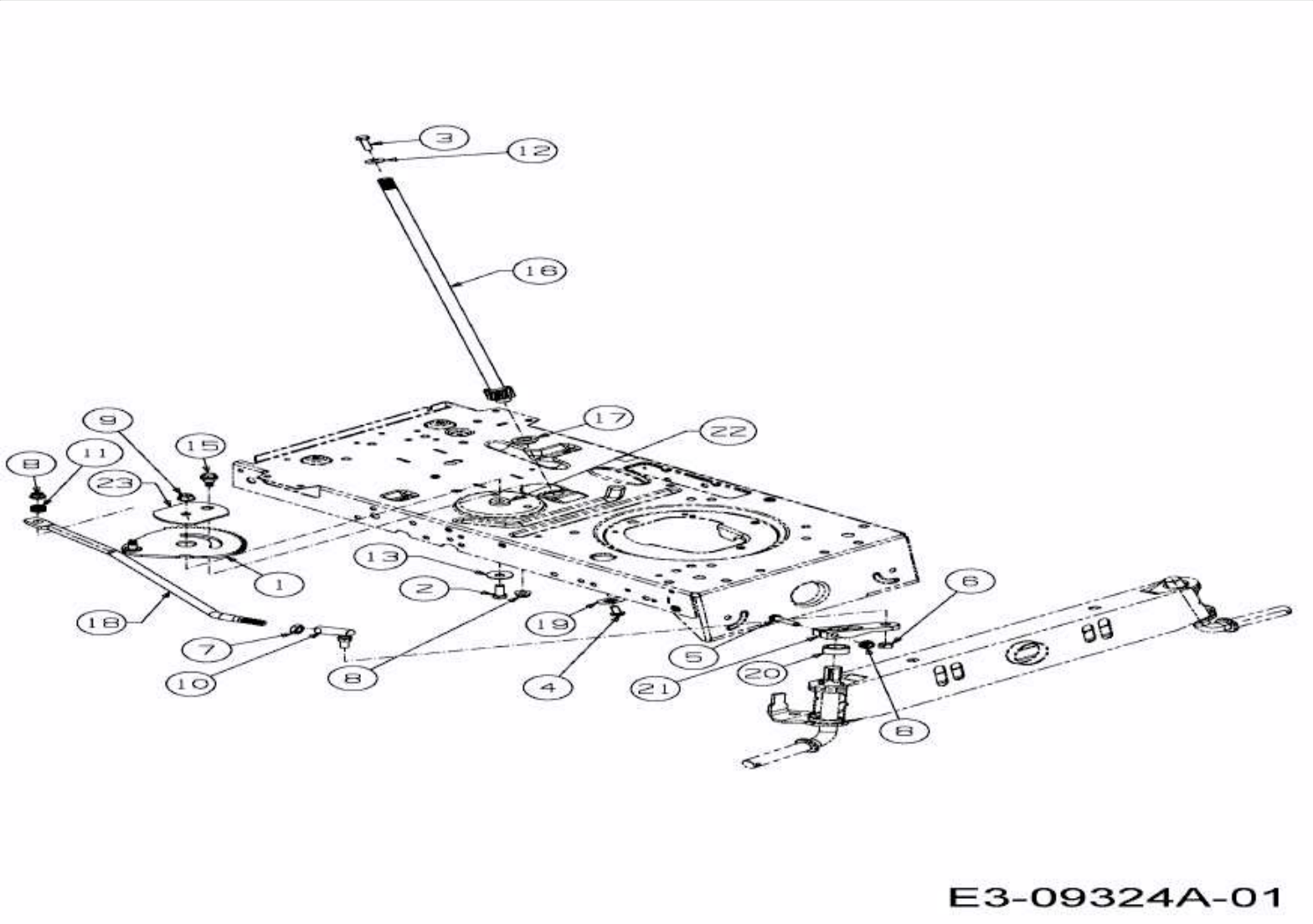E 13/96 H > 13H2795F650 (2016) > LENKUNG