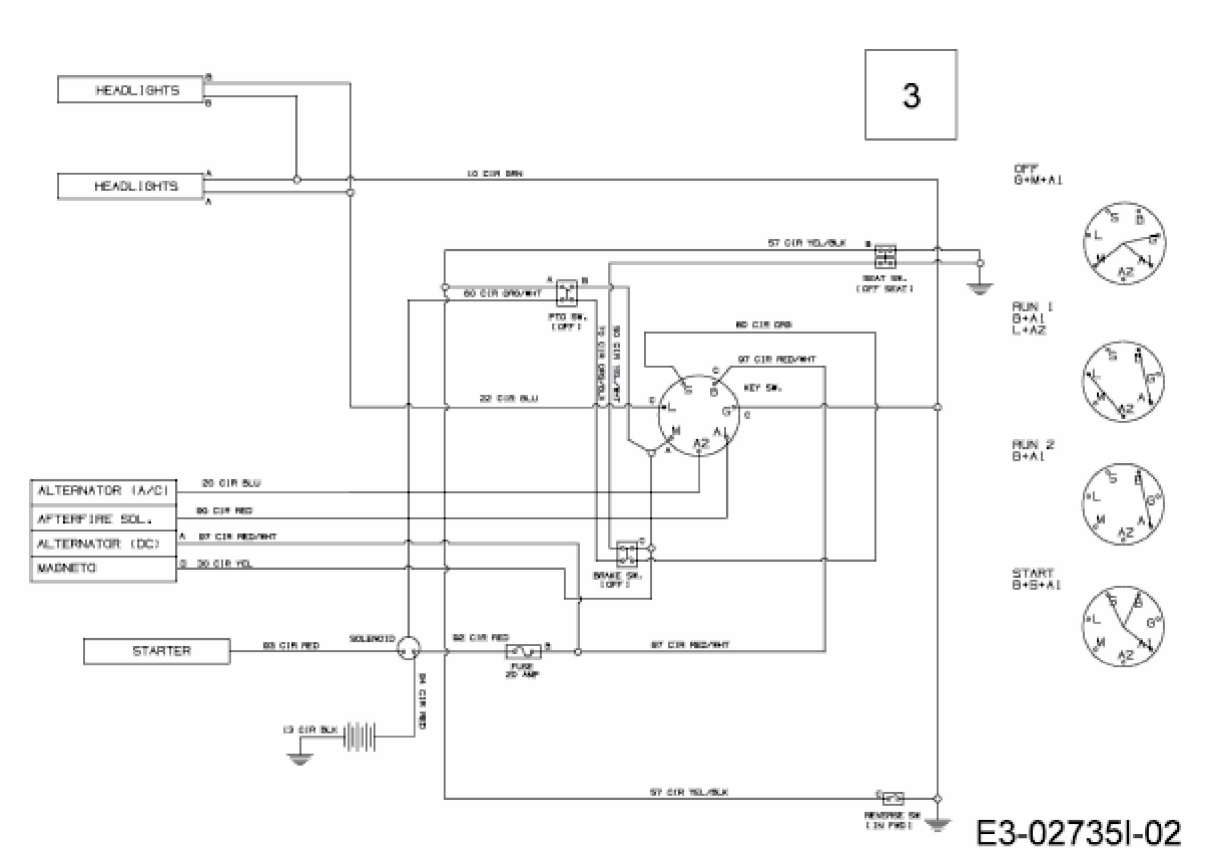
3
HEADLIGHTS
HEADLIGHTS
10 CIR BRN
57 CIR YEL/BLK
SEAT SW.
(OFF SEAT)
60 CIR GRN/WHT
PTO SW.
(OFF)
80 CIR ORG
97 CIR RED/WHT
KEY SW.
22 CIR BLU
ALTERNATOR (A/C)
AFTERFIRE SOL.
ALTERNATOR (DC)
MAGNETO
20 CIR BLU
86 CIR RED
87 CIR RED/WHT
30 CIR YEL
BRAKE SW.
(OFF)
STARTER
85 CIR RED
SOLENOID
82 CIR RED
FUSE
20 AMP
87 CIR RED/WHT
13 CIR BLK
57 CIR YEL/BLK
REVERSE SW
(IN FWD)
OFF
S+M+A1
RUN 1
B+A1
L+A2
RUN 2
B+A1
START
B+S+A1
E3-02735I-02