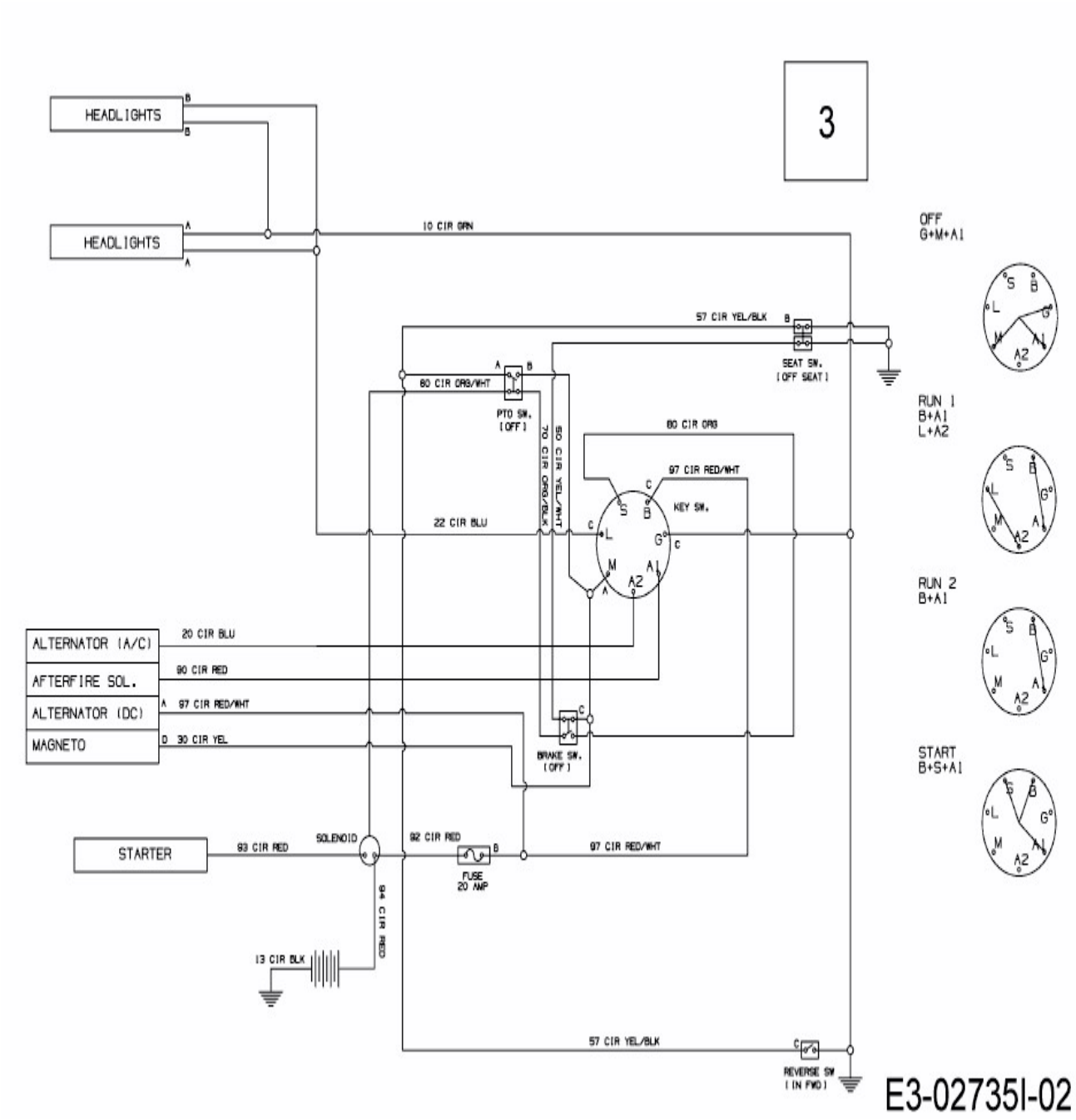
3
HEADLIGHTS
HEADLIGHTS
10 CIR GRN
57 CIR YEL/BLK
SEAT SW.
(OFF SEAT)
80 CIR ORG/WHT
PTO SW.
(OFF)
70 CIR ORG/BLK
50 CIR YEL/WHT
80 CIR ORG
97 CIR RED/WHT
KEY SW.
22 CIR BLU
ALTERNATOR (A/C)
20 CIR BLU
AFTERFIRE SOL.
90 CIR RED
ALTERNATOR (DC)
97 CIR RED/WHT
MAGNETO
30 CIR YEL
BRAKE SW.
(OFF)
STARTER
93 CIR RED
SOLENOID
92 CIR RED
FUSE
20 AMP
97 CIR RED/WHT
94 CIR RED
13 CIR BLK
57 CIR YEL/BLK
REVERSE SW
(IN FWD)
OFF
G+M+A1
RUN 1
B+A1
L+A2
RUN 2
B+A1
START
B+S+A1
E3-02735I-02