GF 140 > 13H2765F607 (2016) > FAHRANTRIEB

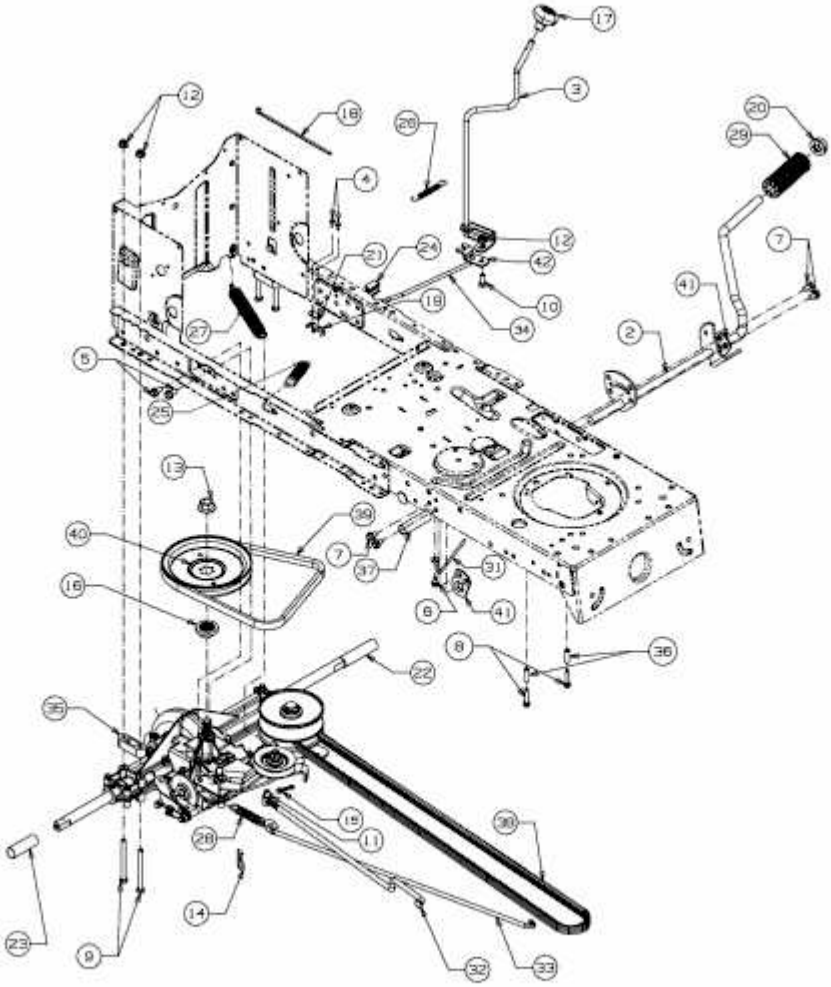

E3-06547C-01