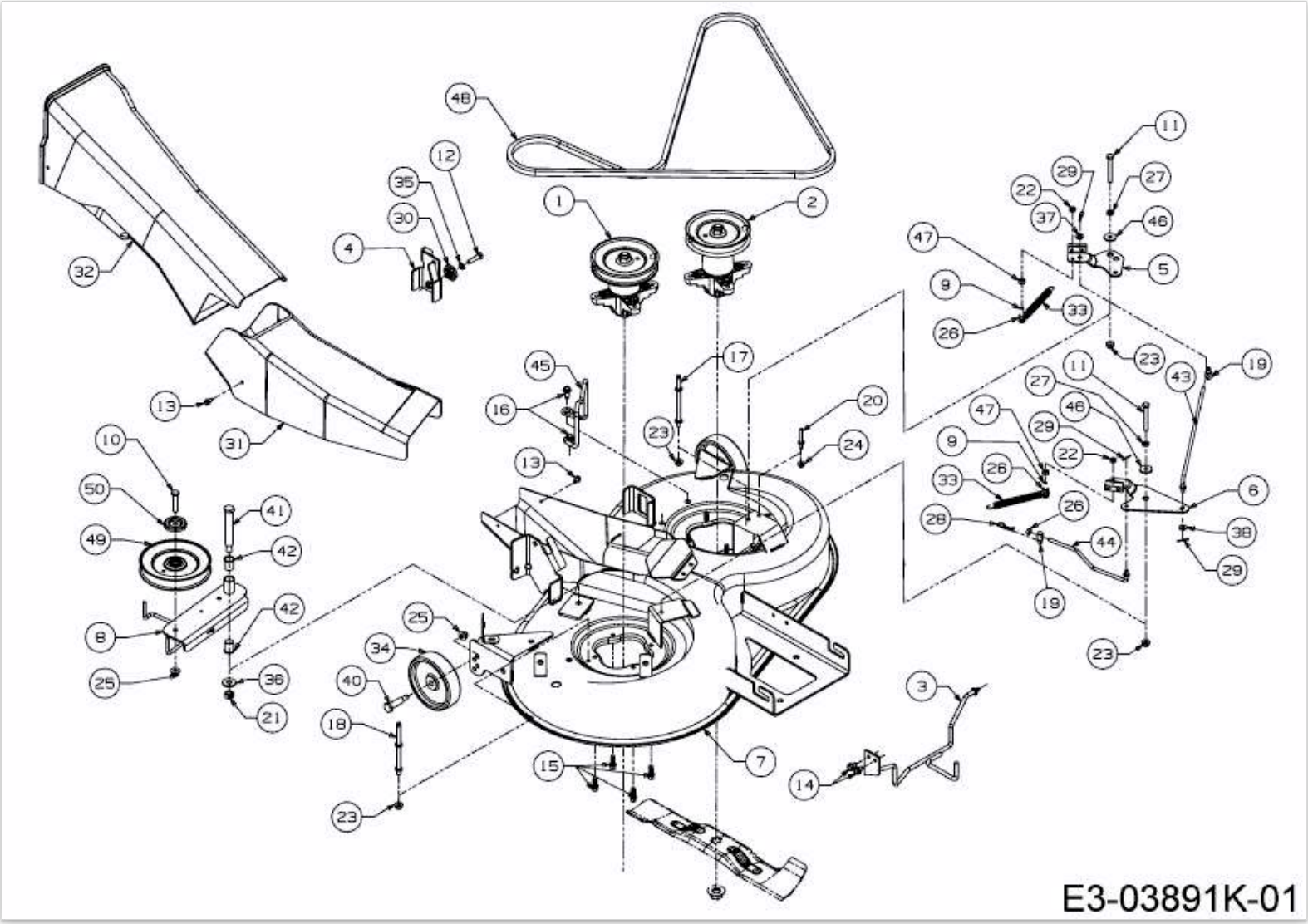E 13/92 T > 13H2765E650 (2017) > MÄHWERK E (36"/92CM)