LT 92 EXH > 13H271KE682 (2016) > LENKUNG

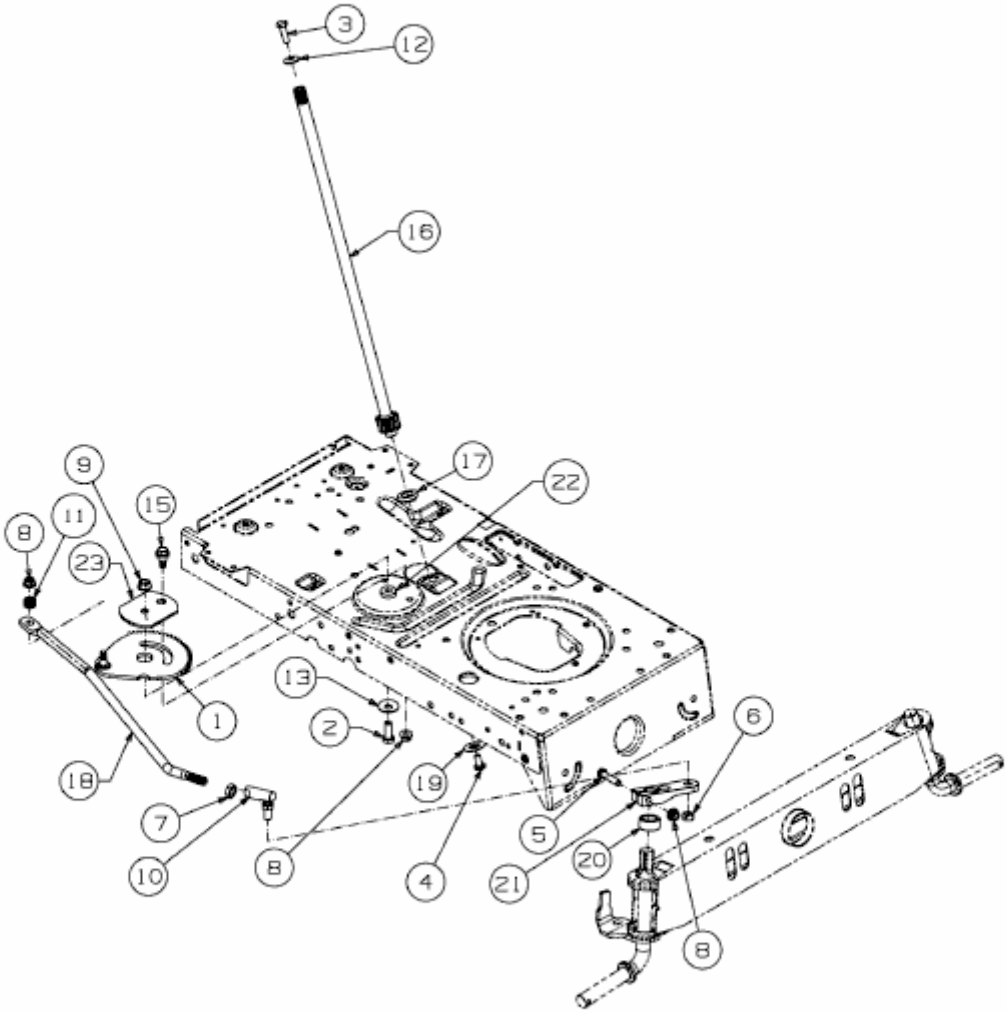

E3-09324A-01