CC 714 HE > 13H271DE603 (2015) > SCHALTPLAN

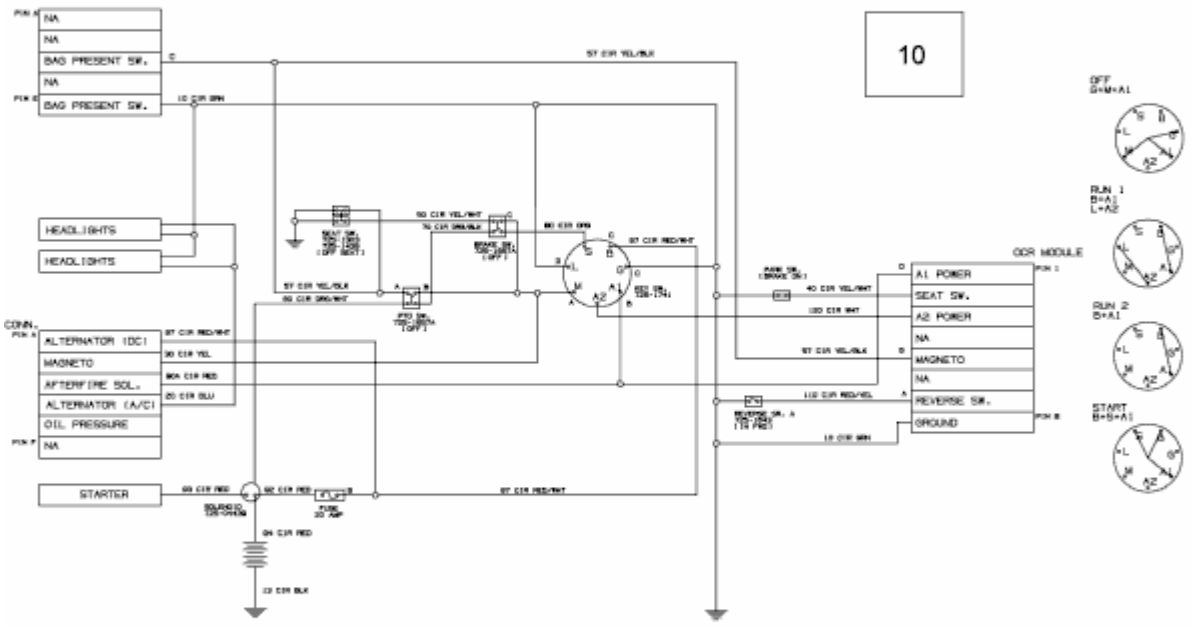

E3-02456B-02